WINCO GENERATORS®
AN AMERICAN COMPANY
www.WINCOGEN.com

WL25000VE-03/A

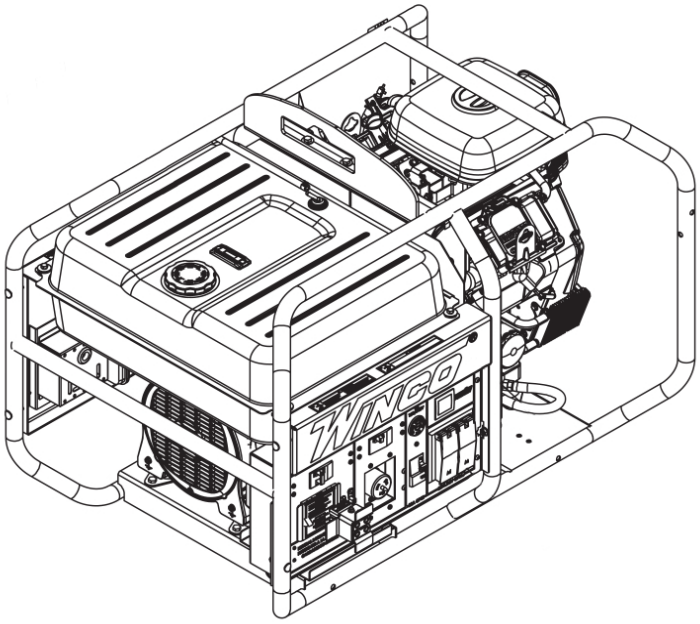

Designed, engineered, and manufactured in our facility located in Le Center, Minnesota, equipped with modern engineering, fabrication and assembly capabilities.

Rugged Design
Engineered and built tough with powder coat paint galvanealed steel.

Full Load Tested
Every generator is 100% load tested in-house.

EFI Engine
Electronic control improves fuel efficiency, performance, and emissions.

VANGUARD® mecc alte

VOLTAGE	STARTING WATTS	STARTING AMPS@ 240V	RUNNING WATTS	RUNNING AMPS@ 120V	RUNNING AMPS@ 240V
120/240 1-PH	24,960	104	20,000	166	83

MOTOR STARTING (CODE G)	6 HP
DBA @ 7 METERS FULL LOAD	79
TOTAL HARMONIC DISTORTION	< 6%
MAIN CIRCUIT BREAKER	100A, 240V
BONDED NEUTRAL	YES
120V RECEPTACLES	(2) NEMA 5-20 20A DUPLEX (GFCI)
120/240V RECEPTACLES	(1) NEMA L14-30R 30A (1) C6365 50A T-L

120/240V ANDERSON	120A
4-WHEEL DOLLY KIT	OPTIONAL
PROTECTIVE ROLL FRAME	1.25" DIA. 14 GA. STEEL
ASSEMBLED IN	USA
EPA APPROVED	YES
CARB APPROVED	NO
TÜV CERTIFICATION CSA	NO
UNIT WARRANTY(1)	3 YEARS COMMERCIAL

RECEPTACLE PANEL

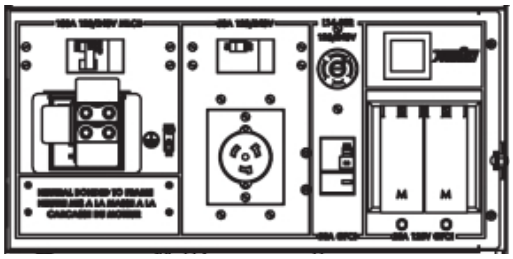

ENGINE

ENGINE BRAND	VANGUARD
ENGINE MODEL	61
ENGINE STARTER	ELECTRIC
ENGINE SPEED	3600 RPM
ENGINE CYLINDERS	V-TWIN
ENGINE HP	40
FREQUENCY	60 HZ
IGNITION SYSTEM	EFI

LUBRICATION	FULL-PRESSURE
BORE/STROKE	85.6 mm x 86.6 mm
DISPLACEMENT/TYPE	993CC
LOW OIL PROTECTION	STANDARD
RECOMMENDED OIL(2)	5W-30 SAE
OIL CAPACITY	2.4 QT
COMPRESSION RATIO	8.5:1

FUEL

FUEL TANK	15 GAL
FULL LOAD RUN TIME	4.5 HRS
FUEL GAUGE	YES

FUEL CONSUMPTION	
100%	3.3 GAL/HR
75%	2.4 GAL/HR
50%	1.3 GAL/HR
25%	.55 GAL/HR

GENERATOR END

GENERATOR END BRAND	MECC ALTE
GENERATOR END MODEL	AME3
PHASE	SINGLE
VOLTAGE REGULATION	AVR +/- 1%
TEMPERATURE RISE	125/40°C
BRUSHLESS	YES
SPEED	3600 RPM

STATOR	2/3 PITCH
WINDINGS	100% COPPER
STATOR WINDING	DOUBLE LAYER CONCENTRIC
BEARINGS	SINGLE (MAINTENANCE FREE)
EFFICIENCY PEAK	79.6%
INSULATION	CLASS H
INGRESS PROTECTION	IP23

BATTERY

REQUIRED BATTERY(3)	BCI GROUP 26 500CCA

SHIPPING

SHIPPING DIMENSIONS (L x W x H)	45” x 32” x 30”
SHIP WEIGHT	456 LBS
FREIGHT CLASS	70

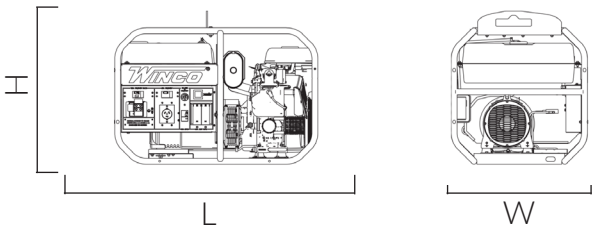

OPTIONAL ACCESSORIES

COVER	45” x 32” x 30”
50A PLUG	64493-000
BATTERY	12V U1 300 CCA

MAINTENANCE KIT	16200-011
4-WHEEL DOLLY KIT	W/ FLAT-FREE TIRES

NOTES:
(1) For more warranty information, see operator’s manual.
(2) The recommended oil is for normal applications.
See operator’s manual for more oil recommendations.
(3) Batteries not included.
Specifications are subject to change without notice.

Sales: 507-357-6821
Service: 507-357-6831