WINCO GENERATORS®
AN AMERICAN COMPANY
www.WINCOGEN.com

EC25000XE-03/A
EC25000XE-04/A
EC25000XE-17/A
EC25000XE-18/A

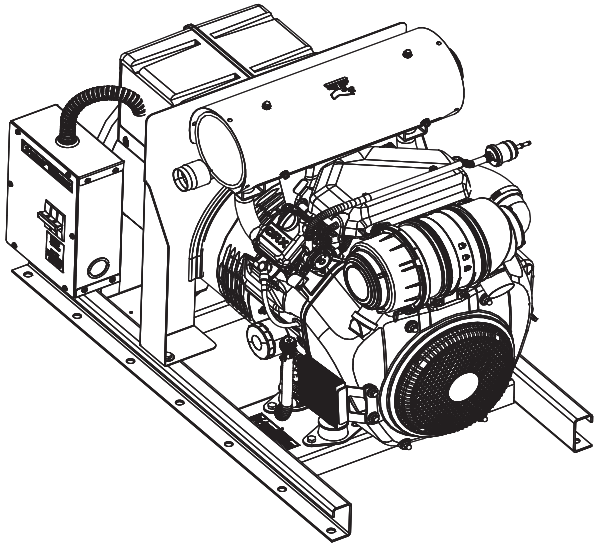

Designed, engineered, and manufactured in our facility located in Le Center, Minnesota, equipped with modern engineering, fabrication and assembly capabilities.

Rugged Design
Engineered and built tough with powder coat paint galvanealed steel.

Full Load Tested
Every generator is 100% load tested in-house.

Industrial CRX Engine
Commercial-style cyclonic element air filtration system helps maintain optimal power on dusty work sites

CRX ENGINES

mecc alte

VOLTAGE	STARTING WATTS	STARTING AMPS	RUNNING WATTS	RUNNING AMPS@ 120V	RUNNING AMPS@ 240V
120/240 1-PH	25,000	104	20,000	166	83
120/208 3-PH	25,000	86	20,000	-	69
120/240 3-PH	25,000	75	20,000	-	60
277/480 3-PH	25,000	37	20,000	-	30

MOTOR STARTING (CODE G)	6 HP
DBA @ 7 METERS FULL LOAD	92
TOTAL HARMONIC DISTORTION	< 6%
MAIN CIRCUIT BREAKER	100A, 240V (SHUNT TRIP)
BONDED NEUTRAL	YES
REQUIRED BATTERY(1)	BCI GROUP 26 500CCA
4-WHEEL DOLLY KIT	OPTIONAL

PROTECTIVE ROLL FRAME	1.25" DIA. 14 GA. STEEL
ASSEMBLED IN	USA
EPA APPROVED	YES
CARB APPROVED	NO
TÜV CERTIFICATION CSA	YES
UNIT WARRANTY(2)	3 YEARS COMMERCIAL

PANEL

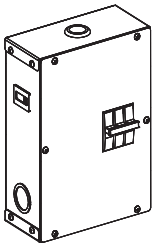

ENGINE

ENGINE BRAND	CRX
ENGINE MODEL	CRX1000
ENGINE STARTER	ELECTRIC
ENGINE SPEED	3600 RPM
ENGINE CYLINDERS	2
ENGINE HP	24
FREQUENCY	60 HZ
IGNITION SYSTEM	TRANSISTOR MAGNETO

LUBRICATION	PRESSURIZED & SPLASH
BORE/STROKE	90 mm x 78.5 mm
DISPLACEMENT/TYPE	999CC
LOW OIL PROTECTION	STANDARD
RECOMMENDED OIL(3)	5W-30 SAE
OIL CAPACITY	2.64 QT
COMPRESSION RATIO	9.0:1

FUEL

FUEL CONSUMPTION	
100%	3.19 GAL/HR
75%	2.43 GAL/HR
50%	1.84 GAL/HR
25%	1.26 GAL/HR

GENERATOR END

GENERATOR END BRAND	MECC ALTE
GENERATOR END MODEL	ECP28C 3L
PHASE	SINGLE
VOLTAGE REGULATION	AVR +/- 1%
TEMPERATURE RISE	125/40°C
BRUSHLESS	YES
SPEED	3600 RPM

STATOR	2/3 PITCH
WINDINGS	100% COPPER
STATOR WINDING	DOUBLE LAYER CONCENTRIC
BEARINGS	SINGLE (MAINTENANCE FREE)
EFFICIENCY PEAK	89.2%
INSULATION	CLASS H
INGRESS PROTECTION	IP23

SHIPPING

SHIPPING DIMENSIONS (L x W x H)	45” x 32” x 30”
SHIP WEIGHT	462 LBS
FREIGHT CLASS	70

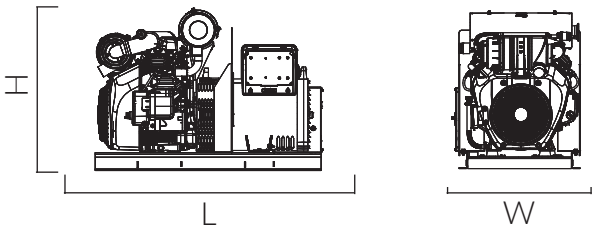

OPTIONAL ACCESSORIES

15 GALLON FUEL TANK	19022-400
FUEL TANK WALL MOUNT KIT	19022-401
BATTERY	12V U1 300 CCA
MAINTENANCE KIT	16200-061

NOTES:
(1) Batteries not included.
(2) For more warranty information, see operator’s manual.
(3) The recommended oil is for normal applications.
See operator’s manual for more oil recommendations.

Specifications are subject to change without notice.

Sales: 507-357-6821
Service: 507-357-6831