P03612

4550 / 3650 WATT 30A 120/240V REMOTE START
GAS PORTABLE GENERATOR
EPA AND cETL CERTIFIED

FIRMAN POWER EQUIPMENT
8716 WEST LUDLOW DR. SUITE #6
PEORIA, AZ 85381
1-844-347-6261
WWW.FIRMANPOWEREQUIPMENT.COM

UPC // 840876136126
STARTING WATTS // 4550
RUNNING WATTS // 3650
VOLTAGE // 120 / 240V
FREQUENCY // 60Hz
ENGINE TYPE // OHV
STARTING SYSTEM // REMOTE / ELECTRIC / RECOIL
FUEL TANK SIZE // 5.0 GAL
RUN-TIME // UP TO 14 HRS (@50% LOAD)
DECIBLES // 67 dB (@7m @50% LOAD)
CARTON L×W×H // 27.2'' × 18.1'' × 19.9''
GROSS WEIGHT // 128 LBS.
UNIT WEIGHT // 119.5 LBS.
UNITS PER PALLET // 16
UNITS PER CONTAINER // 320 / 40HQ

CONTROL PANEL
(2) 5-20R 20A-120V
(1) TT-30R 30A-120V RV READY
(1) L14-30R 30A-120/240V TWIST LOCK

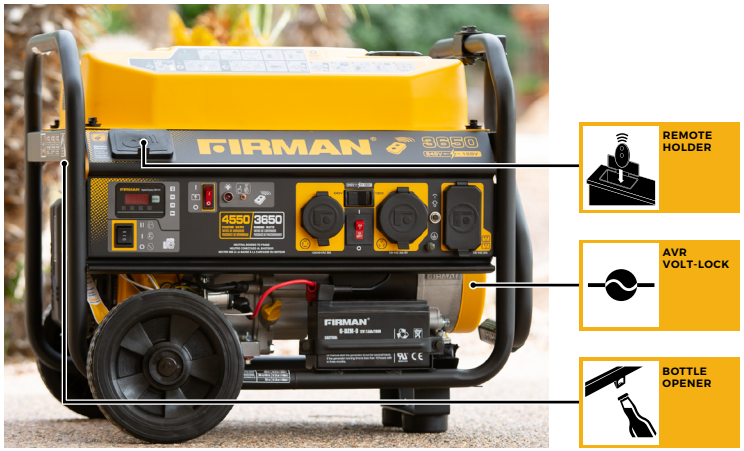

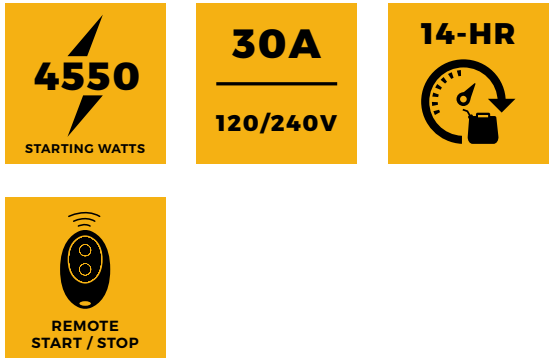

3 YEAR WARRANTY

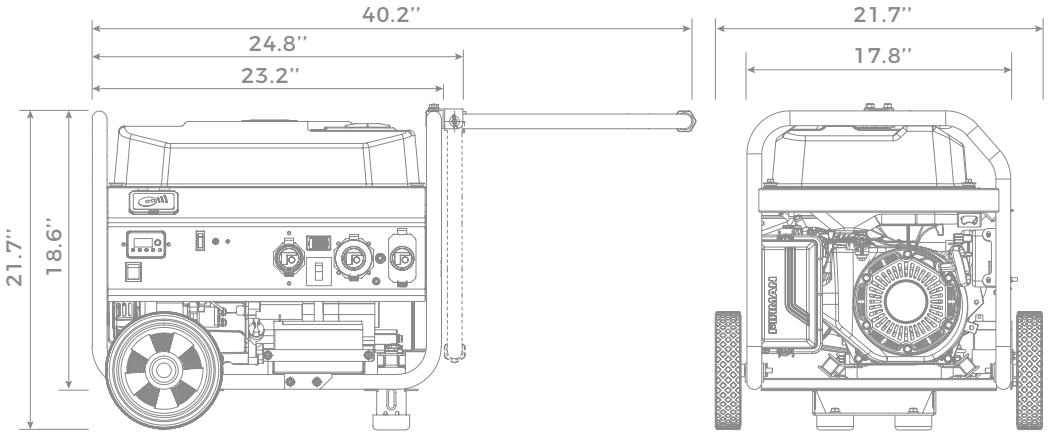

BEST USED FOR

FIRMAN
3650
240V 120V
4550
STARTING WATTS
VATIOS DE ARRANQUE
PUISSANCE DE DÉMARRAGE
3650
RUNNING WATTS
VATIOS DE CONTINUOS
PUISSANCE DE FONCTIONNEMENT
NEUTRAL BONDED TO FRAME
NEUTRO CONECTADO AL BASTIDOR
NEUTRE MIS À LA MASSE À LA CARCASSE DU MOTEUR
240V
120V
ON
OFF
120/240 VAC 30A
120 VAC 30A RV
120 VAC 20A
FIRMAN
6-DZM-9 12V 7.5Ah/20HR
CAUTION: