GENERAC® | MOBILE

# *Owner's Manual*

## *Light Tower*

**MLT4060KV • MLT4060MV • MLT4080KV • MLT4150MV**

**SN _____ and higher**

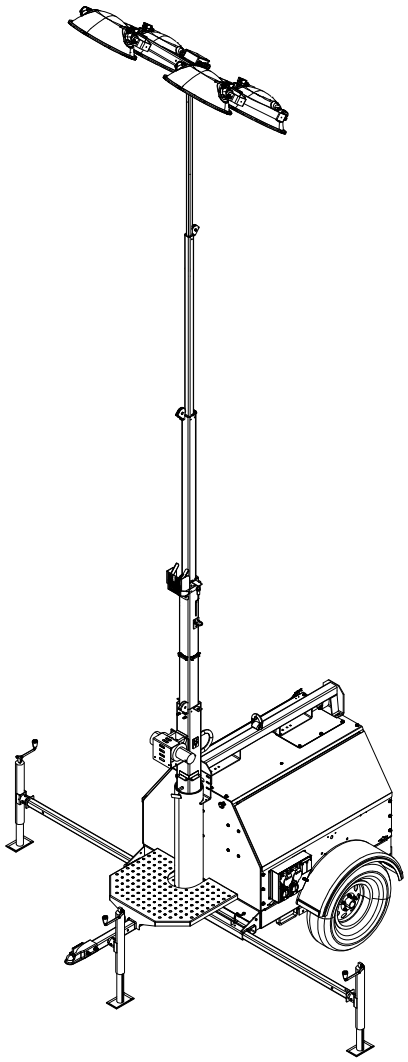

012596

For technical assistance contact:

***www.generacmobileproducts.com***

Technical Support

1-800-926-9768

***SAVE THIS MANUAL FOR FUTURE REFERENCE***

## Use this page to record important information about your unit

| | |
|---|---|
| Unit Model No. | |
| Unit Serial No. | |
| Engine Model No. | |
| Engine Serial No. | |
| Generator Model No. | |
| Generator Serial No. | |

Record the information found on your unit data label on this page. See ***Unit and Serial Number Locations***

Engine and generator serial numbers are located on data plates affixed to the engine and generator, respectively. When contacting a Generac Mobile Authorized Service Dealer (GMASD) about parts and service, always provide the unit model and serial number.

**Operation and Maintenance:** Proper maintenance and care of the unit ensures a minimum number of problems and keeps operating expenses at a minimum. It is the operator's responsibility to perform all safety checks, to verify that all maintenance for safe operation is performed promptly, and to have the equipment checked periodically by a GMASD. Normal maintenance, service, and replacement of parts are the responsibility of the owner/operator and, as such, are not considered defects in materials or workmanship within the terms of the warranty. Individual operating habits and usage may contribute to the need for additional maintenance or service.

**⚠WARNING**

**CANCER AND REPRODUCTIVE HARM**

www.P65Warnings.ca.gov.

(000393a)

**⚠WARNING**

Breathing diesel engine exhaust exposes you to chemicals known to the State of California to cause cancer and birth defects or other reproductive harm.

- Always start and operate the engine in a well-ventilated area.
- If in an enclosed area, vent the exhaust to the outside.
- Do not modify or tamper with the exhaust system.
- Do not idle the engine except as necessary.

For more information go to www.P65Warnings.ca.gov/diesel. (000394)

# Table of Contents


## *Section 1: Introduction and Safety*

**Introduction** ..... **1**
- Read This Manual Thoroughly ..... 1
- How to Obtain Service ..... 1

**Safety Rules** ..... **1**

**General Hazards** ..... **1**

**Explosion and Fire Hazards** ..... **2**

**Trailer Hazards** ..... **2**

**Electrical Hazards** ..... **2**

**Battery Hazards** ..... **3**

**Fuel Hazards** ..... **3**

**Engine Safety** ..... **3**

**Operating Safety** ..... **4**
- Positioning the Unit ..... 4
- Starting the Unit ..... 4
- Raising and Lowering the Mast ..... 4

**Service Safety** ..... **4**

**Towing Safety** ..... **5**
- Hitch and Coupling ..... 5
- Running Lights ..... 5
- Wheels and Tires ..... 5
- Safe Towing Techniques ..... 5
- Tandem Towing Safety ..... 5

**Reporting Trailer Safety Defects** ..... **5**

**Safety and Operating Decals** ..... **6**

## *Section 2: General Information*

**Specifications** ..... **9**

**Unit Dimensions** ..... **10**

**Unit and Serial Number Locations** ..... **11**

**Altitude and Temperature Limitations** ..... **11**

**Fuel Recommendations** ..... **11**

**Engine Oil Recommendations** ..... **11**

**Engine Coolant Recommendations** ..... **11**

**Component Locations** ..... **13**

**Control Panels** ..... **14**
- Standard Analog—MLT4150 ..... 14
- Standard Analog—MLT4060, MLT4080 ..... 14
- Power Zone® (If Equipped)—MLT4060 ..... 15
- Power Zone® (If Equipped)—MLT4080 ..... 15
- Power Zone® (If Equipped)—MLT4150 ..... 16

**Receptacle Panel—MLT4150** ..... **17**

**Power Zone Plus (If Equipped)** ..... **18**

**Operator Screens** ..... **19**

**Containment (If Equipped)** ..... **23**

**Diffused Lighting (If Equipped)** ..... **23**

## *Section 3: Operation*

**Unit Setup** ..... **25**

**Pre-start Checklist** ..... **26**

**Starting the Unit—Analog Controls** ..... **26**
- Raising the Mast ..... 26
- Starting the Engine ..... 27
- Operating the Lights ..... 28

**Starting the Unit—Power Zone (If Equipped)** ..... **29**
- Raising the Mast ..... 29
- Preparing for Start-Up ..... 30
- Manually Starting the Unit ..... 30
- Light Operation ..... 31
- Dusk to Dawn Sensor ..... 31
- Lowering the Mast—Automatic ..... 31

**Voltage Regulator (If Equipped)** ..... **32**

**Convenience Outlets** ..... **32**

**Wet Stacking** ..... **32**

**Shutting Down the Unit—Standard Controls** ..... **32**
- Lowering the Mast—Automatically ..... 33

**Lowering the Mast—Manually** ..... **33**

**Shutting Down the Unit—Power Zone Controls (If Equipped)** ..... **33**

**Automatic Shutdown** ..... **34**

**Emergency Stop Switch** ..... **34**

**Remote Start Terminal Block** ..... **34**

**Towing the Unit** ..... **34**

**Tying Down The Unit** ..... **35**

**Lifting the Unit** ..... **35**

## *Section 4: Maintenance*

**Emissions Information** ..... **37**

**Daily Walk-Around Inspection** ..... **37**

**General Maintenance** ..... **37**

Preparing for Service ..... 37
Cleaning the Unit ..... 37
Inspecting the Unit ..... 37

**Basic Maintenance Schedule ..... 38**

**Winch Use, Operation, and Maintenance ..... 39**
Winch Mechanical Brake ..... 39
Winch Preventive Maintenance Schedule ..... 40

**Lower Radiator Hose Heater (If Equipped)—Use and Maintenance ..... 40**

**Trailer Wheel Bearings ..... 40**

**Jack Maintenance ..... 40**

## *Section 5: Troubleshooting*

**General Troubleshooting ..... 41**

**Troubleshooting the Lights ..... 42**
Troubleshooting Lights—MH Units ..... 42
Troubleshooting Lights—LED Units ..... 43

## *Section 6: Wiring Diagrams*

**Mast Junction Box and Light Connections—MH Units ..... 45**

**Mast Junction Box and Light Connections—LED Units ..... 45**

**MLT4060 and MLT4080—MH Units—Analog Controls ..... 46**

**MLT4060—LED Units—Analog Controls ..... 47**

**MLT4060—LED Units—Power Zone Controls (If Equipped) ..... 48**

**MLT4080—LED Units—Analog Controls ..... 49**

**MLT4080—LED Units—Power Zone Controls (If Equipped) ..... 50**

**AC Wiring—MLT4150—MH Units—Analog Controls ..... 51**

**AC Wiring—Receptacle Panel ..... 52**

**AC Wiring—Receptacle Panel Options (If Equipped) (1 of 2) ..... 53**

**AC Wiring—Receptacle Panel Options (If Equipped) (2 of 2) ..... 54**

**MLT4150—LED Units—Analog Controls ..... 55**
Receptacle Configuration: Two L14-30R, Two 6369 Style B (50 A), and Two 5-20R Duplex ..... 55
Receptacle Configuration: Three L14-30R, One 6369 Style B (50 A), and Two 5-20R Duplex ..... 58
Receptacle Configuration: Four L14-30R and Two 5-20R Duplex ..... 59
Receptacle Configuration: Two TT-30R, Two 14-50R, and Two 5-20R Duplex ..... 60

**MLT4150—LED Units—Power Zone Controls (If Equipped) ..... 61**
Receptacle Configuration: Two L14-30R, Two 6369 Style B (50 A), and Two 5-20R Duplex ..... 61
Receptacle Configuration: Three L14-30R, One 6369 Style B (50 A), and Two 5-20R Duplex ..... 64
Receptacle Configuration: Four L14-30R and Two 5-20R Duplex ..... 65
Receptacle Configuration: Two TT-30R, Two 14-50R, and Two 5-20R Duplex ..... 66

**AC Wiring ..... 67**

**DC Wiring—Mitsubishi ..... 68**

**DC Wiring—Kubota ..... 69**

**DC Wiring—Electric Winch ..... 70**

**DC Wiring for Optional Equipment ..... 71**

**Trailer Lights ..... 72**

# Section 1: Introduction and Safety

## Introduction

Thank you for purchasing a Generac Mobile product. This unit has been designed to provide high performance, efficient operation, and years of use when maintained properly.

The information in this manual is accurate based on products produced at the time of publication. The manufacturer reserves the right to make technical updates, corrections, and product revisions at any time without notice.

### Read This Manual Thoroughly

**WARNING**

Consult Manual. Read and understand manual completely before using product. Failure to completely understand manual and product could result in death or serious injury. (000100a)

If any section of the manual is not understood, contact your nearest GMASD, or contact Generac Mobile at 1-800-926-9768 or ***www.generacmobileproducts.com*** with any questions or concerns.

The owner is responsible for proper maintenance and safe use of the equipment. Comply with regulations the Occupational Safety and Health Administration (OSHA) has established, or with equivalent standards. Also, verify that the unit is applied, used, and maintained in accordance with the manufacturer's instructions and recommendations. Do nothing that might alter safe application/usage and render the unit in noncompliance with the aforementioned codes, standards, laws, and regulations.

Save these instructions for future reference. This manual contains important instructions for the unit that should be followed during setup, operation and maintenance of the unit and battery. ALWAYS supply this manual to any individual that will use this machine.

### How to Obtain Service

When the unit requires servicing or repairs, contact a GMASD for assistance. Service technicians are factory-trained and are capable of handling all service needs. For assistance locating a dealer, go to ***https://www.generacmobileproducts.com/parts-service/find-service***.

When contacting a GMASD about parts and service, always supply the complete model and serial number of the unit as given on the data decal located on the unit. Record the model and serial numbers in the spaces provided on the front cover of this manual.

## Safety Rules

The manufacturer cannot anticipate every possible circumstance that might involve a hazard. The warnings in this manual, and on tags and decals affixed to the unit are, therefore, not all inclusive. If using a procedure, work method or operating technique that the manufacturer does not specifically recommend, verify that it is safe for others. Also make sure the procedure, work method or operating technique utilized does not render the equipment unsafe.

Throughout this publication, and on tags and decals affixed to the unit, DANGER, WARNING, CAUTION and NOTE blocks are used to alert personnel to special instructions about a particular operation that may be hazardous if performed incorrectly or carelessly. Observe them carefully. Their definitions are as follows:

**DANGER**

Indicates a hazardous situation which, if not avoided, will result in death or serious injury.

(000001)

**WARNING**

Indicates a hazardous situation which, if not avoided, could result in death or serious injury.

(000002)

**CAUTION**

Indicates a hazardous situation which, if not avoided, could result in minor or moderate injury.

(000003)

**NOTE:** Notes contain additional information important to a procedure and will be found within the regular text of this manual.

These safety alerts cannot eliminate the hazards that they indicate. Common sense and strict compliance with the special instructions while performing the action or service are essential to preventing accidents.

## General Hazards

**DANGER**

Asphyxiation. Running engines produce carbon monoxide, a colorless, odorless, poisonous gas. Carbon monoxide, if not avoided, will result in death or serious injury. (000103)

**WARNING**

Hearing Loss. Hearing protection is recommended when using this machine. Failure to wear hearing protection could result in permanant hearing loss. (000107)

**WARNING**

Moving Parts. Keep clothing, hair, and appendages away from moving parts. Failure to do so could result in death or serious injury. (000111)

**WARNING**

Hot Surfaces. When operating machine, do not touch hot surfaces. Keep machine away from combustibles during use. Hot surfaces could result in severe burns or fire. (000108)

**WARNING**

Risk of injury. Do not operate or service this machine if not fully alert. Fatigue can impair the ability to operate or service this equipment and could result in death or serious injury. (000215a)

**WARNING**

Risk of burns. Allow engine to cool before draining oil or coolant. Failure to do so could result in death or serious injury. (000139)

## Explosion and Fire Hazards

**DANGER**

Explosion and Fire. Fuel and vapors are extremely flammable and explosive. Add fuel in a well ventilated area. Keep fire and spark away. Failure to do so will result in death or serious injury. (000105)

**WARNING**

Risk of Fire. Unit must be positioned in a manner that prevents combustible material accumulation underneath. Failure to do so could result in death or serious injury. (000147)

**WARNING**

Risk of Fire. Hot surfaces could ignite combustibles, resulting in fire. Fire could result in death or serious injury. (000110)

**WARNING**

Explosion and Fire. Do not smoke while refueling unit. Failure to do so could result in death, serious injury, or property or equipment damage. (000284a)

## Trailer Hazards

**WARNING**

Personal injury. Trailer must be securely coupled to the hitch with the chains correctly attached. Uncoupled or unchained towing could result in death or serious injury. (000233a)

**WARNING**

Personal injury. Do not operate unit during transport. Doing so could result in death, serious injury, or property damage. (000231a)

**WARNING**

Crushing hazard. Verify unit is properly secured and on level ground. An unsecured unit can suddenly roll or move, causing death or serious injury. (000234a)

**WARNING**

Property or Equipment Damage. Tighten wheel lug nuts after first 50 miles to factory specifications. Failure to do so could result in death, serious injury, property or equipment damage. (000235)

## Electrical Hazards

**DANGER**

Electrocution. In the event of electrical accident, immediately shut power OFF. Use non-conductive implements to free victim from live conductor. Apply first aid and get medical help. Failure to do so will result in death or serious injury. (000145)

**DANGER**

Electrocution. Water contact with a power source, if not avoided, will result in death or serious injury. (000104)

**DANGER**

Electrocution. Contact with bare wires, terminals, and connections while generator is running will result in death or serious injury.

(000144)

**DANGER**

Electrocution. Verify electrical system is properly grounded before applying power. Failure to do so will result in death or serious injury.

(000152)

**DANGER**

Electrocution. Do not wear jewelry while working on this equipment. Doing so will result in death or serious injury.

(000188)

**DANGER**

Electrocution. DO NOT use the unit if electrical cord is cut or worn through. Doing so will result in death or serious injury.

(000263a)

## Battery Hazards

**WARNING**

Explosion. Batteries emit explosive gases while charging. Keep fire and spark away. Wear protective gear when working with batteries. Failure to do so could result in death or serious injury.

(000137a)

**WARNING**

Explosion. Do not dispose of batteries in a fire. Batteries are explosive. Electrolyte solution can cause burns and blindness. If electrolyte contacts skin or eyes, flush with water and seek immediate medical attention.

(000162)

**WARNING**

Risk of burn. Do not open or mutilate batteries. Batteries contain electrolyte solution which can cause burns and blindness. If electrolyte contacts skin or eyes, flush with water and seek immediate medical attention.

(000163a)

**WARNING**

Environmental Hazard. Always recycle batteries at an official recycling center in accordance with all local laws and regulations. Failure to do so could result in environmental damage, death, or serious injury.

(000228)

Always recycle batteries in accordance with local laws and regulations. Contact your local solid waste collection site or recycling facility to obtain information on local recycling processes. For more information on battery recycling, visit the Battery Council International website at: ***http://batterycouncil.org***.

## Fuel Hazards

**DANGER**

Explosion and fire. Fuel and vapors are extremely flammable and explosive. No leakage of fuel is permitted. Keep fire and spark away. Failure to do so will result in death or serious injury.

(000192)

**DANGER**

Risk of fire. Allow fuel spills to completely dry before starting engine. Failure to do so will result in death or serious injury.

(000174)

- **DO NOT** fill fuel tank near an open flame, while smoking, or while engine is running. **DO NOT** fill tank in an enclosed area with poor ventilation.
- **DO NOT** operate with the fuel tank cap loose or missing.

## Engine Safety

Internal combustion engines present special hazards during operation and fueling. Failure to follow the safety guidelines described below could result in severe injury or death. Read and follow all safety alerts described in the engine operator's manual. A copy of this manual was supplied with the unit when it was shipped from the factory.

- **DO NOT** run engine indoors or in an area with poor ventilation. Make sure engine exhaust cannot seep into closed rooms or ventilation equipment.
- **DO NOT** clean air filter with gasoline or other types of low flash point solvents.
- **DO NOT** operate the unit without a functional exhaust system.
- Shut the engine down if any of the following conditions exist during operation:
  - Noticeable change in engine speed.
  - Loss of electrical output.
  - Equipment connected to the unit overheats.
  - Sparking occurs.
  - Engine misfires or there is excessive engine/generator vibration.
  - Protective covers are loose or missing.
  - Ambient air temperature is above 120 °F (49 °C).

# Operating Safety

## Positioning the Unit

**DANGER**

High Voltage. Verify area above unit is clear of overhead wires and obstructions. Contact with high-voltage power lines will result in death or serious injury. (000260a)

**WARNING**

Burn hazard. Never operate lights with a damaged or missing lens cover. Lamps are hot and pressurized while in use. Unprotected lamps can shatter, causing severe injury. (000277)

- The area immediately surrounding the unit should be dry, clean, and free of debris.
- Position and operate the unit on a firm, level surface.
- If the unit is equipped with a frame grounding stud, follow the National Electrical Code (NEC), state, and local regulations when connecting.

## Starting the Unit

**DANGER**

Electrocution. DO NOT use the unit if electrical cord is cut or worn through. Doing so will result in death or serious injury. (000263a)

**WARNING**

Equipment damage. Do not attempt to start or operate a unit in need of repair or scheduled maintenance. Doing so could result in serious injury, death, or equipment failure or damage. (000291)

## Raising and Lowering the Mast

**WARNING**

Electrocution. Do not set up or operate this unit if severe weather is expected. Lightning strikes can kill or cause severe injury even if you are not touching the unit. (000296)

**WARNING**

> 50 mph (80 km/h)

Tipping hazard. Do not set up the unit if high winds are expected. High winds can cause the unit to tip or fall, causing severe injury or machine damage. (000594a)

**WARNING**

Personal injury or equipment damage. Do not raise or lower the mast while the unit is operating. Doing so can break the lenses and cause the lamps to shatter. (000279)

**WARNING**

Personal Injury. Stop immediately if the mast hangs up or the winch cable develops slack. Excess slack could cause the mast to collapse, resulting in personal injury or equipment damage. (000265)

**WARNING**

Tipping hazard. Extend the outriggers and level the unit before raising the mast. Keep the outriggers extended while the mast is up. Failure to do so could cause the unit to tip and fall and could result in death or serious injury. (000266)

**WARNING**

Burn hazard. Lamps become extremely hot while in use. Allow 10–15 minutes for cooling before handling or lowering mast. Touching a hot lens or fixture can cause severe burns. (000278)

- Keep area around the unit clear of people while raising and lowering the mast.
- **ALWAYS** lower the mast when not in use.
- The tower extends up to 25 ft (7.4 m). Make sure area above trailer is open and clear of overhead wires and obstructions.
- If for any reason any part of mast hangs up or winch cable develops slack while raising or lowering tower, STOP immediately! Contact a GMASD.
- **NEVER** remove safety pin or pull mast locking pin while tower is up.

# Service Safety

This unit uses high voltage circuits capable of causing serious injury or death. Only a qualified and licensed electrician should troubleshoot or repair problems occurring in this equipment.

- Before servicing the unit, verify the Control Power switch and circuit breakers are in the OFF (O) position, and the negative (-) terminal on the battery is disconnected. **DO NOT** perform even routine service (oil/filter changes, cleaning, etc.) unless all electrical components are shut down.
- **ALWAYS** use extreme caution when servicing this unit in damp conditions. Do not service the unit if your skin or clothing is wet. Do not allow water to collect around the base of the unit.

- **DO NOT** wash the unit with high pressure hoses, power washers, or steam cleaners. Water may collect in the unit, causing damage to electrical parts.
- Replace all missing and hard to read decals. Decals provide important operating instructions and warn of dangers and hazards.
- Wear heavy leather gloves when handling winch cables. Never let cables slip through bare hands.
- Only use mild soap and water to clean the lens covers. Other chemicals may damage the lens covers.
- Make sure slings, chains, hooks, ramps, jacks and other types of lifting devices are attached securely and have enough weight-bearing capacity to lift or hold the equipment safely. Always remain aware of the position of other people around you when lifting the equipment.

# Towing Safety

Towing a trailer requires care. Both the trailer and vehicle must be in good condition and securely fastened to each other to reduce the possibility of an accident. Some states require that large trailers be registered and licensed. Contact your local Department of Transportation office to check on license requirements for your particular unit.

### Hitch and Coupling

- Verify the hitch and coupling on the towing vehicle are rated equal to, or greater than, the trailer's Gross Vehicle Weight Rating (GVWR).
- Verify the trailer hitch and the coupling are compatible. Make sure the coupling is securely fastened to the vehicle.
- **DO NOT** tow trailer using defective parts. Inspect the hitch and coupling for wear or damage.
- Connect safety chains in a crossing pattern under the tongue.
- Before towing the trailer, verify that the weight of the trailer is equal across all tires. On trailers with adjustable height hitches, adjust the angle of the trailer tongue to keep the trailer as level as possible.
- Attach the breakaway cable to the rear bumper of the towing vehicle.

### Running Lights

Verify directional and brake lights on the trailer are connected and working properly

### Wheels and Tires

- Check trailer tires for wear and proper inflation.
- Verify wheel lug nuts are present and tightened to the specified torque.

### Safe Towing Techniques

- Practice turning, stopping and backing up in an area away from heavy traffic prior to transporting the unit.
- Maximum recommended speed for highway towing of single (non-tandem) units is 55 mph (88.5 km/h). Recommended off-road towing speed is 10 mph (16 km/h) or less, depending on terrain.
- When towing, maintain extra space between vehicles and avoid soft shoulders, curbs and sudden lane changes.

### Tandem Towing Safety

This unit may be equipped with a tandem tow hitch. This feature allows the operator to tow a second light tower behind the unit.

- Do not use the tandem tow hitch to tow any other equipment other than a unit of the same model.
- Local regulations may limit or prohibit tandem towing. There may be restrictions on towing speed, overall vehicle length, the types of roads on which the units can be towed, and which road lanes are permissible for towing vehicles. Check with the local authority having jurisdiction (for example, the state Department of Transportation) before using the tandem tow hitch.
- Connect the second unit using the same procedures and preventative safety measures as required for a single unit.

# Reporting Trailer Safety Defects

If you believe your trailer has a defect which could cause a crash or could cause injury or death, you should immediately inform the National Highway Traffic Safety Administration (NHTSA) in addition to notifying Generac Mobile.

If NHTSA receives similar complaints, it may open an investigation; and if it finds that a safety defect exists in a group of vehicles, it may order a recall and remedy campaign. However, NHTSA cannot become involved in an individual problem between you, your dealer, or Generac Mobile.

To contact NHTSA, you may either call the Auto Safety Hotline toll-free at 1-888-327-4236 (TTY:1-800-424-9153), go to ***http://www.safercar.gov***; or write to:

Administrator
NHTSA
1200 New Jersey Avenue S.E.
Washington, DC 20590

You can also obtain other information about motor vehicle safety from ***http://www.safercar.gov***.

# Safety and Operating Decals

See ***Figure 1-1*** through ***Figure 1-2***. This unit features numerous safety and operating decals. These decals provide important operating instructions and warn of dangers and hazards. The following diagrams illustrate decal locations and descriptions.

Replace any missing or hard-to-read decals and use care when washing or cleaning the unit. Decal part numbers can be found in the parts manual at ***www.generacmobileproducts.com.***

| ID | Description | ID | Description |
|---|---|---|---|
| **1** | Central lift point. | **15** | Warning: Ultraviolet radiation from lamp can cause serious skin and eye irritation. |
| **2** | Forklift point. | **16** | Danger: Contact with overhead electrical power lines will cause serious injury or death. |
| **3** | Warning: Pressurized fluid, hot surface. | **17** | Notice: Lamp glass can be damaged by road debris from towing vehicle and other vehicles. |
| **4** | Danger: Diesel fuel hazards. Read manual. | **18** | Warning: Hot surface. |
| **5** | Ultra low sulfur fuel only. | **19** | Always keep tension on cables. |
| **6** | Tie-down point. | **20** | Caution: Read manual. |
| **7** | Danger: Read manual. | **21** | Warning: Cutting hazard, entanglement hazard. |
| **8** | Auxiliary outlet circuit breakers behind box. | **22** | Warning: Hot surface, cutting hazard. |
| **9** | Grounding stud. | **23** | Danger: Electrocution. Read manual. |
| **10** | Warning: Do not move unit with tower up! | **24** | Danger: Electrocution. Read manual. |
| **11** | Warning: Do not set up unit in high wind or during electrical storms! Check for overhead obstructions before use! | **25** | Breaker reset. Voltage selector switch. |
| **12** | Unit setup instructions | **26** | Electrical output. |
| **13** | Towing instructions | **27** | California Proposition 65 warning. |
| **14** | Align arrows before towing unit. | **—** | — |

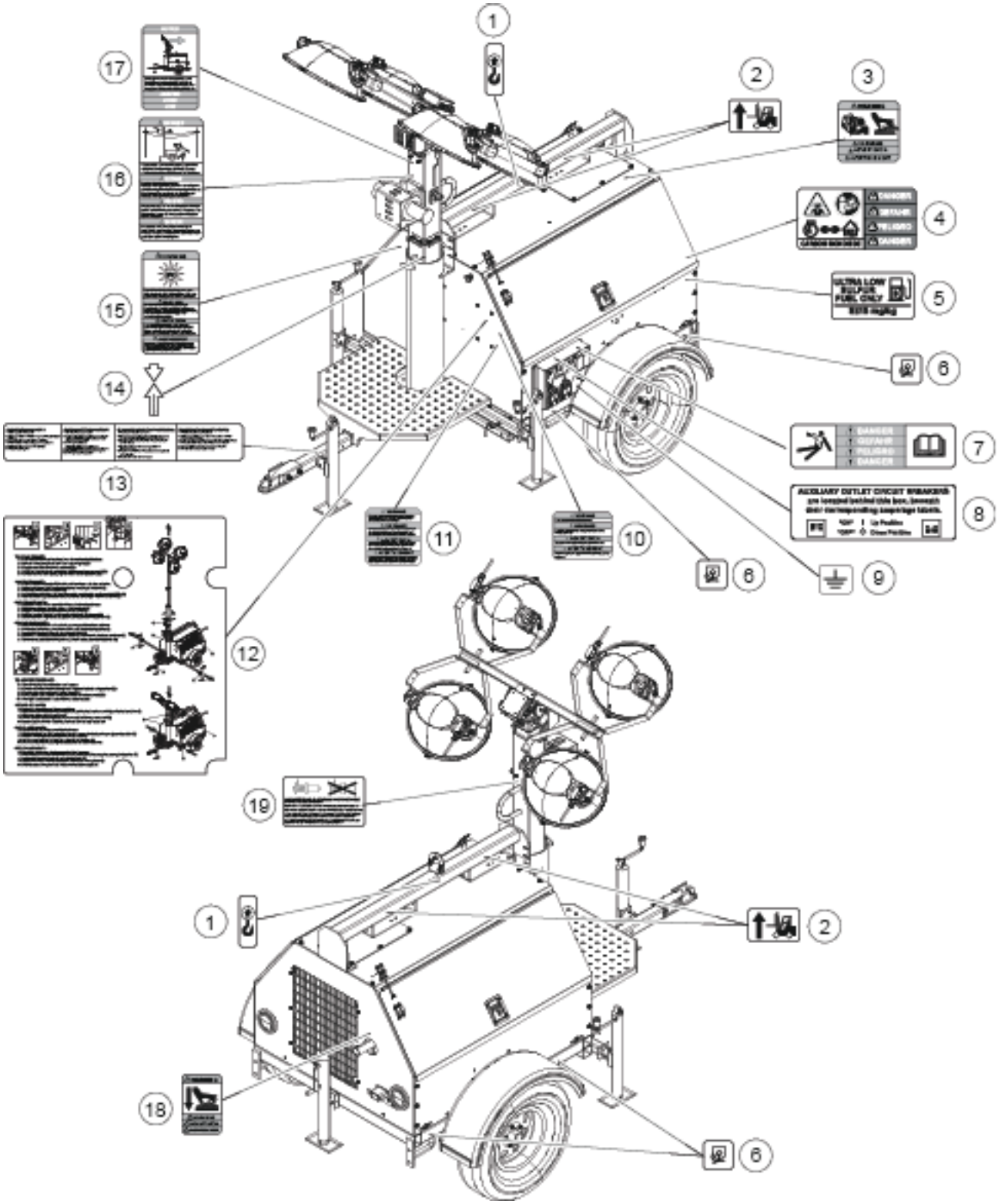


***Figure 1-1. Decals (1 of 2)—Exterior Decals***

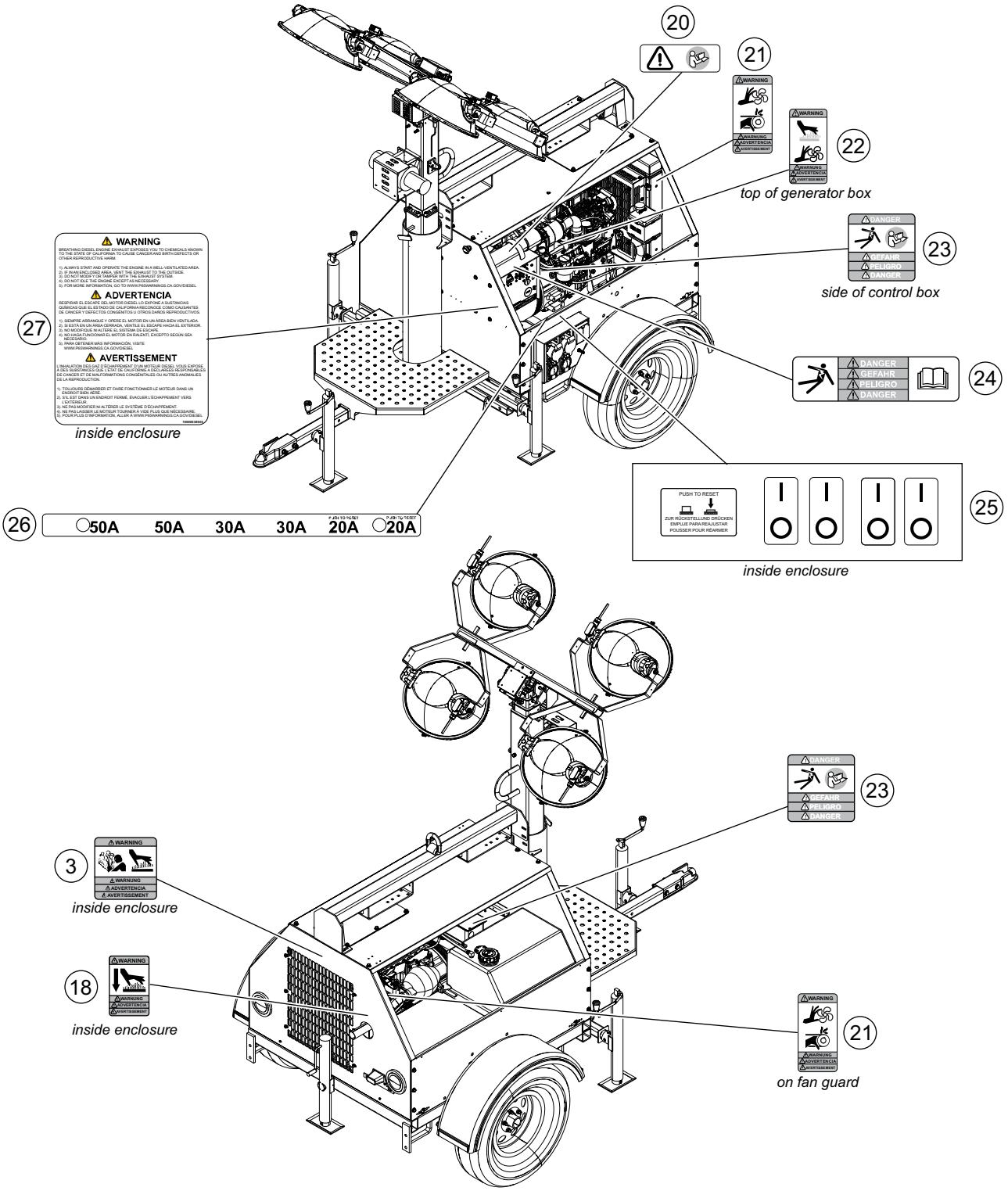


***Figure 1-2. Decals (2 of 2)—Interior Decals***

## Specifications

| Description | UOM | MLT4060MV | MLT4060KV | MLT4080KV | MLT4150MV |
|---|---|---|---|---|---|
| **Engine** | | | | | |
| Make (Model) | — | Mitsubishi® (L3E) | Kubota® (D1005) | Kubota (D1105) | Mitsubishi (S4L2) |
| Type | — | Diesel, liquid cooled, 4-stroke | Diesel, liquid cooled, 4-stroke | Diesel, liquid cooled, 4-stroke | Diesel, liquid cooled, 4-stroke |
| Cylinders | qty | 3 | 3 | 3 | 4 |
| Displacement | $in^3$ (L) | 58.1 (0.952) | 61.08 (1.00) | 68.53 (1.12) | 107.7 (1.76) |
| Power—Prime | hp (kW) | 11.3 (8.4) | 11.7 (8.7) | 13.5 (10.1) | 22.4 (16.7) |
| Power—Standby | hp (kW) | 12.2 (9.1) | 13.1 (9.8) | 15.4 (11.5) | 24.3 (18.1) |
| Operating Speed | rpm | 1,800 | 1,800 | 1,800 | 1,800 |
| Fuel Consumption—100% Load | gph (Lph) | 0.59 (2.23) | 0.65 (2.46) | 0.86 (3.26) | 1.46 (5.53) |
| EPA Certification | Tier | 4 Final | 4 Final | 4 Final | 4 Final |
| Battery—Group Number | — | 24 | 24 | 24 | 24 |
| Battery—Voltage (Qty. Of Batteries) | VDC (qty) | 12 (1) | 12 (1) | 12 (1) | 12 (1) |
| Battery—Rating | CCA | 440 | 440 | 440 | 440 |
| **Capacities** | | | | | |
| Fuel Tank—Total | gal (L) | 57.1 (216) | 57.1 (216) | 57.1 (216) | 57.1 (216) |
| Fuel Tank—Usable | gal (L) | 56.4 (213) | 56.4 (213) | 56.4 (213) | 56.4 (213) |
| Coolant—Including Engine | qt (L) | 4.5 (4.3) | 4.8 (4.5) | 4.8 (4.5) | 4.5 (4.3) |
| Oil—Including Filter | qt (L) | 5.0 (4.7) | 5.4 (5.1) | 5.4 (5.1) | 5.0 (4.7) |
| **Containment (If Equipped)** | — | 110% | 110% | 110% | 110% |
| **Generator** | | | | | |
| Make (Model) | — | Marathon Electric® (201CSA5411) | Marathon Electric (201CSA5411) | Marathon Electric (201CSA5420) | Marathon Electric (333CSA3024) |
| Type, Insulation | — | Brushless, F | Brushless, F | Brushless, F | Brushless, F |
| Output | kW (kVA) | 6.0 (6.0) | 6.0 (6.0) | 8.0 (8.0) | 15.0 (15.0) |
| Output—Voltages (1Ø) | V | 120, 240 | 120, 240 | 120, 240 | 120, 240 |
| Output—Amperes **120V (240 V)** | A | 50 (25) | 50 (25) | 66 (33) | 50 (25) |
| Frequency | Hz | 60 | 60 | 60 | 60 |
| Power Factor (1Ø) | — | 1 | 1 | 1 | 1 |
| Sound (23 ft. At Prime) | dB (A) | 70 | 70 | 70 | 71 |
| **AC Distribution** | | | | | |
| Circuit Breaker Size | A | 30 | 30 | 40 | 70 |
| Voltage Regulation—Standard | — | Capacitor, ±6% | Capacitor, ±6% | Capacitor, ±6% | Capacitor, ±6% |
| Voltage Regulation—AVR (If Equipped) | — | NA | NA | NA | ±1% |
| Voltages Available (1Ø) | V | 120, 240 | 120, 240 | 120, 240 | 120, 240 |
| **Lighting—Metal Halide (MH)** | | | | | |
| Lights—Power | [qty]×W | 4×320 | 4×320 | 4×320 | 4×320 |
| Ballast Type | — | Coil & Core | Coil & Core | Coil & Core | Coil & Core |
| Total Brightness | lm | 528,000 | 528,000 | 528,000 | 172,000 |
| **Lighting—Light-Emitting Diode (LED)** | | | | | |
| Lights—Power | [qty]×W | 4×320 | 4×320 | 4×320 | 4×320 |
| Total Brightness | lm | 188,000 | 188,000 | 188,000 | 188,000 |
| **Mast** | | | | | |
| Winch | — | Electric | Electric | Electric | Electric |
| Sections | qty | 5 | 5 | 5 | 5 |
| Range Of Motion—Rotation | degrees | 359 | 359 | 359 | 359 |
| Wind Rating | mph (km/h) | 65 (105) | 65 (105) | 65 (105) | 65 (105) |

*Specifications continued on next page.*

| Description | UOM | MLT4060MV | MLT4060KV | MLT4080KV | MLT4150MV |
|---|---|---|---|---|---|
| **Trailer** | | | | | |
| Capacity—Axle Rating | lb (kg) | 2,200 (988) | 2,200 (998) | 2,200 (988) | 3,000 (1,361) |
| Axles | qty | 1 | 1 | 1 | 1 |
| Tires | size | ST175/80/ D13 | ST175/80/ D13 | ST175/80/ D13 | ST205/75 R15 |
| Hitch | size, type | 2 in (51 mm), Ball | 2 in (51 mm), Ball | 2 in (51 mm), Ball | 2 in (51 mm), Ball |
| Maximum Tire Pressure | psi | 50 | 50 | 50 | 50 |
| **Unit Weight** | | | | | |
| Dry | lb (kg) | 1,759 (798) | 1,779 (807) | 1,785 (810) | 2,157 (978.4) |
| Operating | lb (kg) | 2,162 (981) | 2,182 (990) | 2,188 (992) | 2,565 (1,163.5) |

*Specifications are subject to change without notice.*

# Unit Dimensions

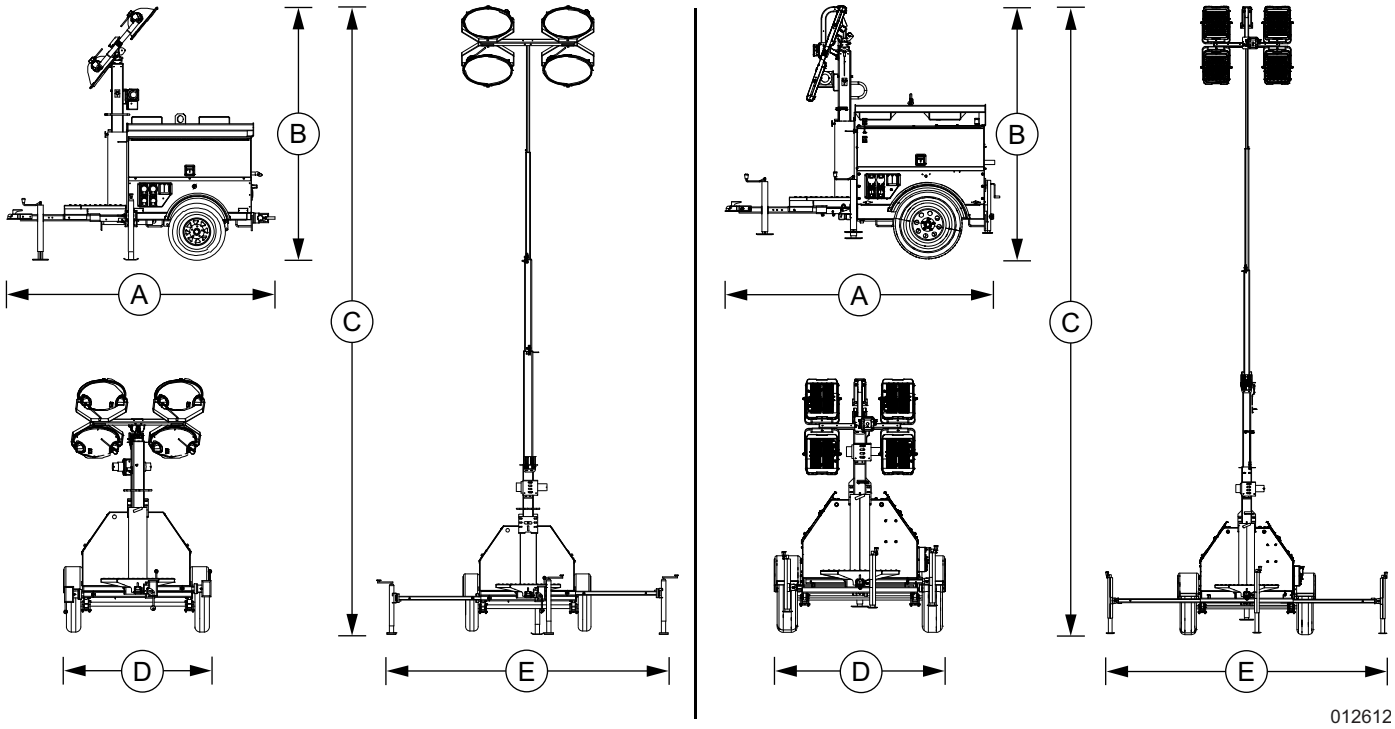


***Figure 2-1. MH Units (Left), LED Units (Right)***

| | A | B | C | D | E |
|---|---|---|---|---|---|
| **MH Units** | 113.0 in (2.9 m) | 107.0 in (2.7 m) | 25.0 ft (7.6 m) | 70.0 in (1.8 m) | 140.0 in (3.6 m) |
| **LED Units** | 113.0 in (2.9 m) | 103.0 in (2.6 m) | 24.7 ft (7.6 m) | 70.0 in (1.8 m) | 140.0 in (3.6 m) |

# Unit and Serial Number Locations

See ***Figure 2-2*** to locate the unit ID tag and vehicle identification number (VIN) tag. Important information displays on these tags, such as unit model number, serial number, VIN, and tire loading information. Record the information from these tags in the event the tags are lost or damaged. This information may be needed when ordering parts or requesting assistance.

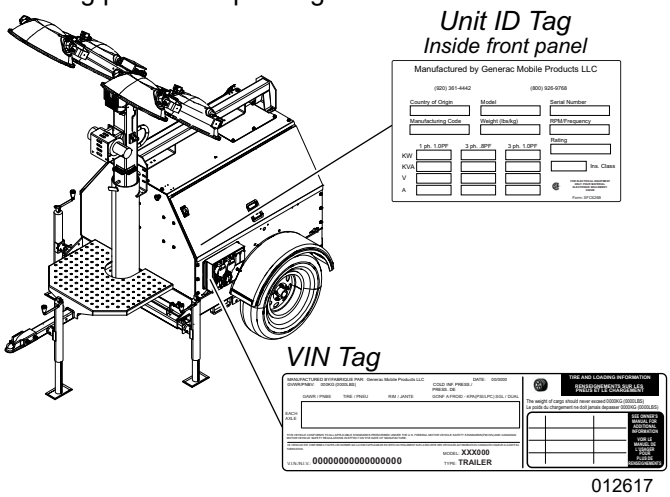


***Figure 2-2. Unit and Serial Number Locations***

# Altitude and Temperature Limitations

All units are subject to derating for altitude and ambient air temperature. Derating reduces the available power for operating tools and accessories connected to the outlets.

For this unit, derate factors are:

- **Altitude:** Every 1,000 ft (305 m) increase of elevation results in an estimated 2–4% reduction of engine performance.
- **Air temperature:** Above 72 ºF (22 ºC), every 10 ºF (5.6 ºC) increase of ambient air temperature results in an estimated 1% reduction of engine performance.

# Fuel Recommendations

**DANGER**

Explosion and Fire. Fuel and vapors are extremely flammable and explosive. Keep fire and spark away. Failure to do so will result in death or serious injury. (000168)

**DANGER**

Explosion and Fire. Do not overfill fuel tank. Overfilling may cause fuel to leak and ignite or explode, resulting in death or serious injury. (000204)

This unit is designed to operate on diesel fuel. Follow these guidelines:

- Use only ultra-low-sulfur diesel fuel.
- When temperatures are at or below freezing, use No. 1D diesel fuel.
- When temperatures are above freezing, use No. 2D diesel fuel.
- In some areas of the country, climatized fuel—a mixture of 1D and 2D, may also be used

**IMPORTANT NOTE:** DO NOT use home heating oil or bio-diesel fuel.

**IMPORTANT NOTE:** Comply with all laws regulating the storage and handling of fuels.

**NOTE:** See ***Specifications*** for fuel tank capacity.

# Engine Oil Recommendations

To maintain the product warranty, the engine oil should be serviced in accordance with the recommendations of this manual. For service interval, see ***Basic Maintenance Schedule***.

**CAUTION**

Engine damage. Verify proper type and quantity of engine oil prior to starting engine. Failure to do so could result in engine damage. (000135)

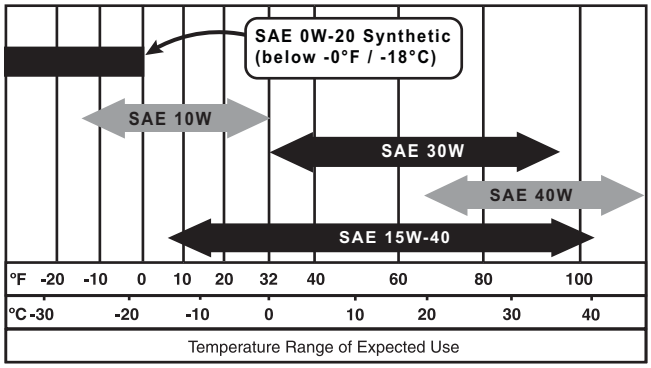


# Engine Coolant Recommendations

**DANGER**

Risk of poisoning. Do not use mouth to siphon coolant. Doing so will result in death or serious injury. (000149)

**WARNING**

Risk of burns. Do not open coolant system until engine has completely cooled. Doing so could result in serious injury.

(000154)

**CAUTION**

Risk of overheating. Do not use any chromate base rust inhibitor with propylene glycol base antifreeze, boosters, or additives. Doing so will cause overheating and possible equipment damage. (000165a)

- For engine coolant recommendations, see the OEM engine manual or contact a GMASD.
- In summer, use anti-corrosive to prevent rotting.
- In winter, use anti-freeze to prevent freezing.

**IMPORTANT NOTE:** Incorrect engine coolant can damage the engine cooling system.

- Mix de-mineralized water or distilled water with coolant. Do not mix hard water with coolant.

**IMPORTANT NOTE:** Hard water causes scale deposits, which decrease cooling efficiency and increase engine temperature, eventually resulting in engine damage.

- See table below for mixtures:

| Coolant Freezing Point—°F (°C) | -12 (-24) | -34 (-36) | -54 (-48) | -90 (-67) |
|---|---|---|---|---|
| Water (% Volume) | 50 | 40 | 40 | 40 |
| Anitfreeze (% Volume) | 50 | 60 | 60 | 60 |

**NOTE:** Maximum freeze protection is 60%.

# Component Locations

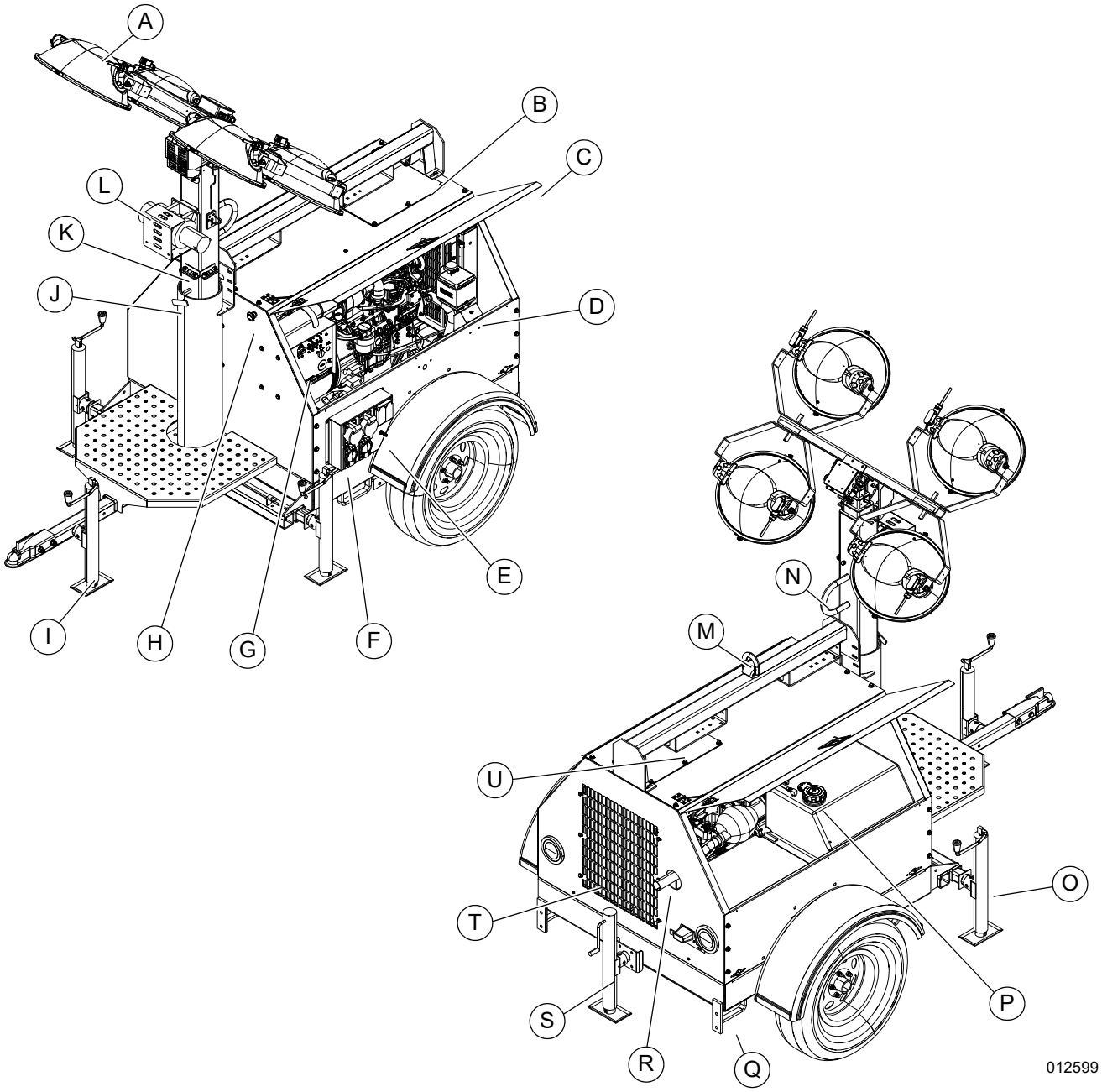


***Figure 2-3. Main Components—All Units***

**A** Light fixture (4 locations)
**B** Radiator access panel
**C** Engine access door (2 locations)
**D** Mast UP-DOWN switch
**E** Grounding stud
**F** Convenience outlets (if equipped)
**G** Control panel
**H** Emergency stop (E-Stop) switch
**I** Tongue jack
**J** Mast rotation knob
**K** Bubble level
**L** Winch
**M** Unit lift point
**N** Mast rotation handle
**O** Outrigger with jack (2 locations)
**P** Fuel fill port
**Q** Tie-down point (4 locations)
**R** Engine exhaust
**S** Rear jack
**T** Air intake
**U** Forklift pocket (2 locations)

# Control Panels

## Standard Analog—MLT4150

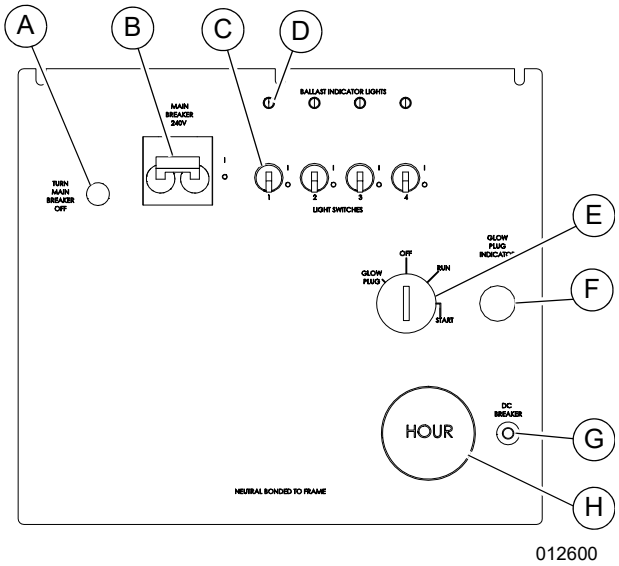


*Figure 2-4. Standard Analog Controls—MLT4150*

**(A) Circuit Breaker Indicator Light**

When lit, main circuit breaker must be opened (switched OFF) before starting engine.

**(B) Main Circuit Breaker**

240 V, 70 A or 100 A circuit breaker. Controls power to lights and convenience outlets.

**(C) Light ON-OFF Switch (4 Locations)**

Each light is controlled by an independent power switch. Each power switch is equipped with an independent circuit breaker.

**(D) Ballast Indicator Lights**

MH units only. When lit, ballast is powering light.

**(E) Engine START Switch**

Keyed switch operates glow plugs, and starts and stops engine.

**(F) Glow Plug Indicator**

Mitsubishi engines only. When lit, engine glow plugs are operational.

**(G) DC Circuit Breaker**

10 A circuit breaker. Controls engine electrical system.

**(H) Engine Hour Meter**

Displays engine lifetime run-hours.

## Standard Analog—MLT4060, MLT4080

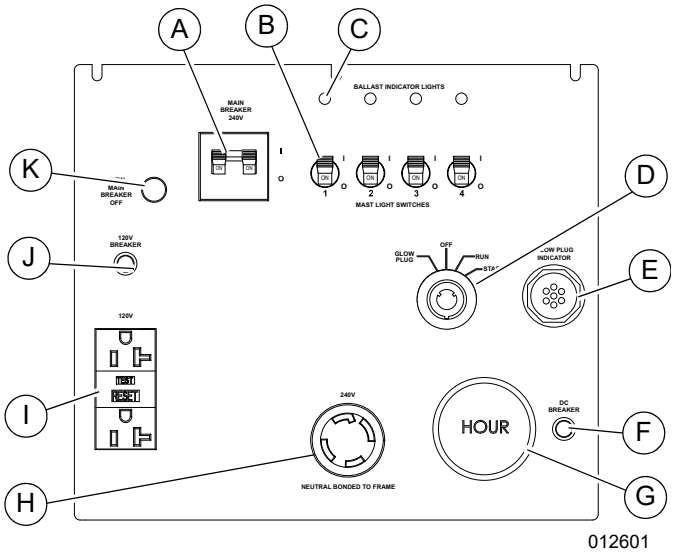


*Figure 2-5. Standard Analog Controls—MLT4060, MLT4080*

**(A) Main Circuit Breaker**

240 V, 30 A circuit breaker. Controls power to lights and convenience outlets. Also, disables starting circuit if engine-starting is attempted when main breaker is ON (I).

**(B) Light ON-OFF Switch (4 Locations)**

Each light is controlled by an independent power switch.

**(C) Ballast Indicator Light (4 Locations) (If Equipped)**

MH units only. When lit, ballast is powering light.

**(D) Engine START Switch**

Keyed switch operates glow plugs, and starts and stops engine.

**(E) Glow Plug Indicator (If Equipped)**

Mitsubishi engines only. When lit, engine glow plugs are operational.

**(F) DC Circuit Breaker**

10 A circuit breaker. Controls engine electrical system.

**(G) Engine Hour Meter**

Displays engine lifetime run-hours.

**(H) 240 V, Twist-Lock Outlet**

240 V, 30 A, twist-lock outlet. supplies power to connected accessories when engine is running and main breaker is ON (I).

**(I) 120 V, GFCI, Duplex Outlet**

120 V, 20 A, GFCI, duplex outlet. Supplies power to connected accessories when engine is running and main circuit breaker is ON (I).

**(J) 120 V Breaker**

120 V, 20 A circuit breaker. Controls the 120 V GFCI duplex outlet.

**(K) Circuit Breaker Indicator Light**

When lit, main circuit breaker must be opened (switched OFF) before starting engine.

## Power Zone® (If Equipped)—MLT4060

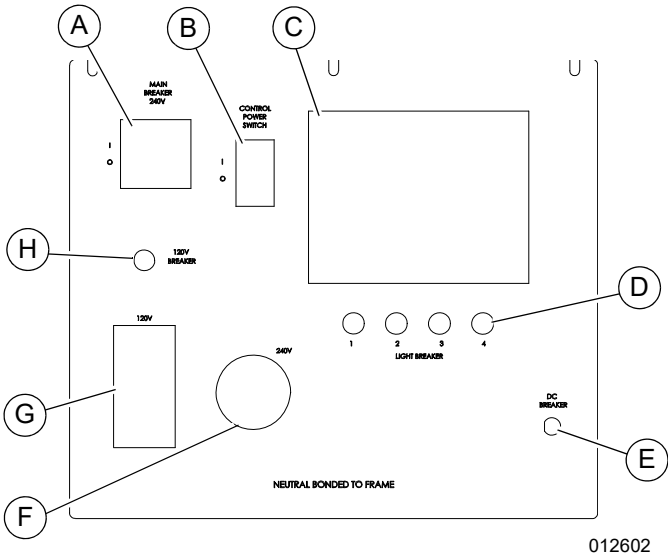


*Figure 2-6. Optional Power Zone Controls*

**(A) Main Circuit Breaker**

240 V, 30 A circuit breaker. Controls power to lights and convenience outlets. Also, disables starting circuit if engine-starting is attempted when main breaker is ON (I).

**(B) Control Power Switch**

Main power switch. Controls power to the controller.

**(C) Controller**

Main control unit for the light tower. Power Zone Plus.

**(D) Light Circuit Breaker (4 Locations)**

200 V, 15 A circuit breaker

**(E) DC Circuit Breaker**

**(F) 240 V Twist-Lock Outlet**

240 V, 30 A, twist-lock outlet. supplies power to connected accessories when engine is running and main breaker is ON (I).

**(G) 120 V, GFCI, Duplex Outlet**

120 V, 20 A, GFCI, duplex outlet. Supplies power to connected accessories when engine is running and main circuit breaker is ON (I).

**(H) 120 V Circuit Breaker**

## Power Zone® (If Equipped)—MLT4080

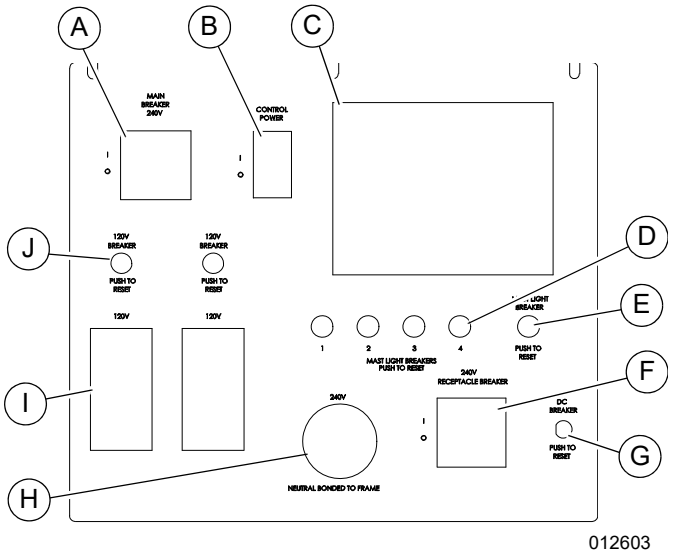


*Figure 2-7. Optional Power Zone Controls*

**(A) Main Circuit Breaker**

240 V, 30 A circuit breaker. Controls power to lights and convenience outlets. Also, disables starting circuit if engine-starting is attempted when main breaker is ON (I).

**(B) Control Power Switch**

Main power switch. Controls power to the controller.

**(C) Controller**

Main control unit for the light tower. Power Zone Plus.

**(D) Light Circuit Breaker (4 Locations)**

200 V, 15 A circuit breaker.

**(E) Mast Light Breaker**

**(F) 240 V Receptacle Breaker**

**(G) DC Circuit Breaker**

10 A circuit breaker. Controls engine electrical system.

**(H) 240 V Twist-Lock Convenience Outlet**

240 V, 30 A, twist-lock outlet. supplies power to connected accessories when engine is running and main breaker is ON (I).

**(I) 120 V GFCI Duplex Convenience Outlet**

120 V, 20 A, GFCI, duplex outlet. Supplies power to connected accessories when engine is running and main circuit breaker is ON (I).

**(J) 120 V Circuit Breaker**

## Power Zone® (If Equipped)—MLT4150

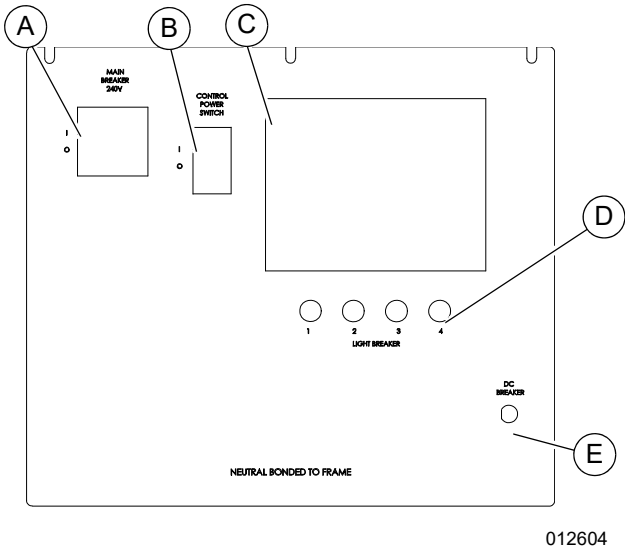


*Figure 2-8. Optional Power Zone Controls*

**(A) Main Circuit Breaker**

240 V, 30 A circuit breaker. Controls power to lights and convenience outlets. Also, disables starting circuit if engine-starting is attempted when main breaker is ON (I).

**(B) Control Power Switch**

Main power switch. Controls power to the controller.

**(C) Controller**

Main control unit for the light tower. Power Zone Plus.

**(D) Light Circuit Breaker (4 Locations)**

200 V, 15 A circuit breaker

**(E) DC Circuit Breaker**

10 A circuit breaker. Controls engine electrical system.

# Receptacle Panel—MLT4150

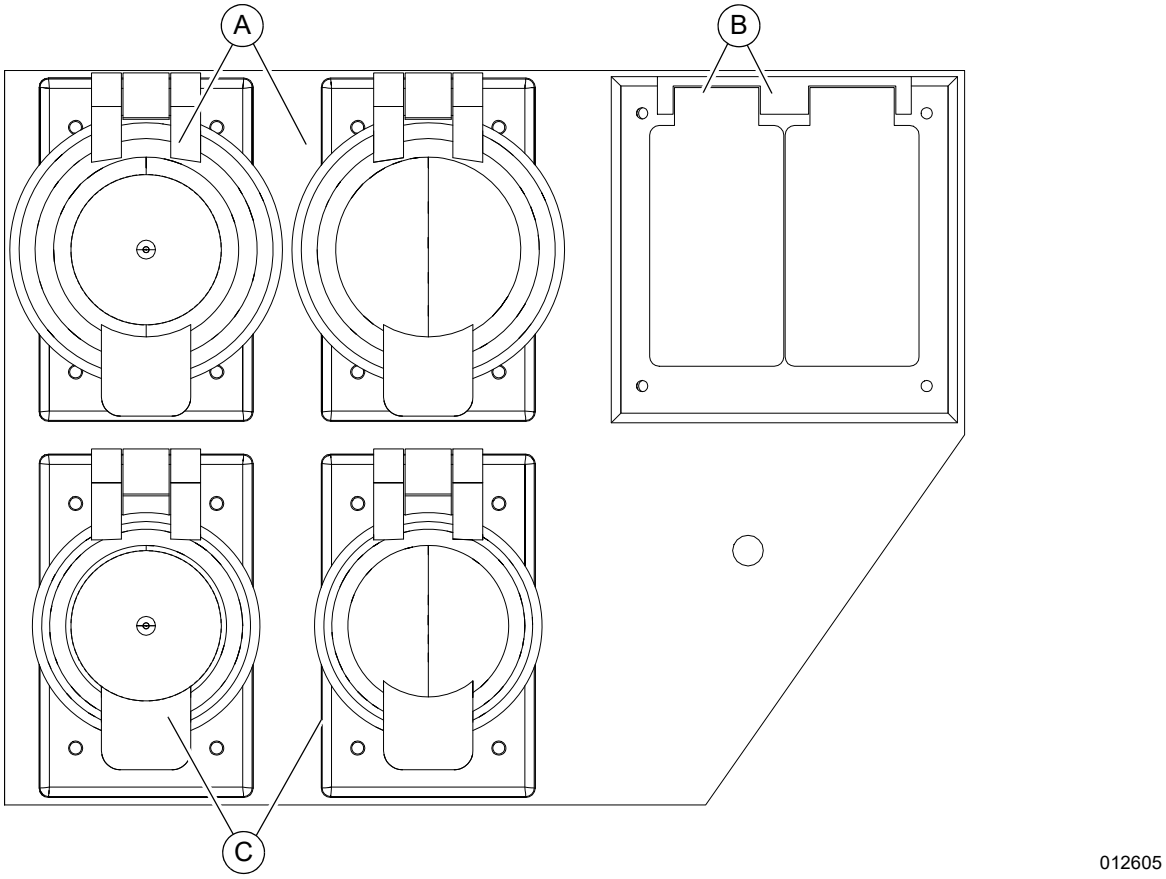


***Figure 2-9. Receptacle Panel—Only Equipped in MLT4150 (MH and LED) Models***

**(A) 240 V, 30 A, twist-lock outlets (L14-30R)**

**(B) 120 V, 20 A, GFCI, duplex outlets (5-20R, UL 2003)**

**(C) 240 V, 50 A, twist-lock outlet**

# Power Zone Plus (If Equipped)

See ***Figure 2-10***. The Power Zone Plus is an AUTO start controller that monitors the unit and indicates operational status and fault conditions. The controller can be programmed to automatically start or stop based on time schedule, fault condition, or load demand.

The controller constantly monitors vital generator and engine functions for a number of preprogrammed alarm and fault conditions. When a fault condition occurs, the engine shuts down automatically and the LCD window shows the fault that caused the shutdown. To resume operation, the fault condition must be corrected.

This controller records a history of unit performance, which may be viewed at any time and will not be lost when the controller is powered down.

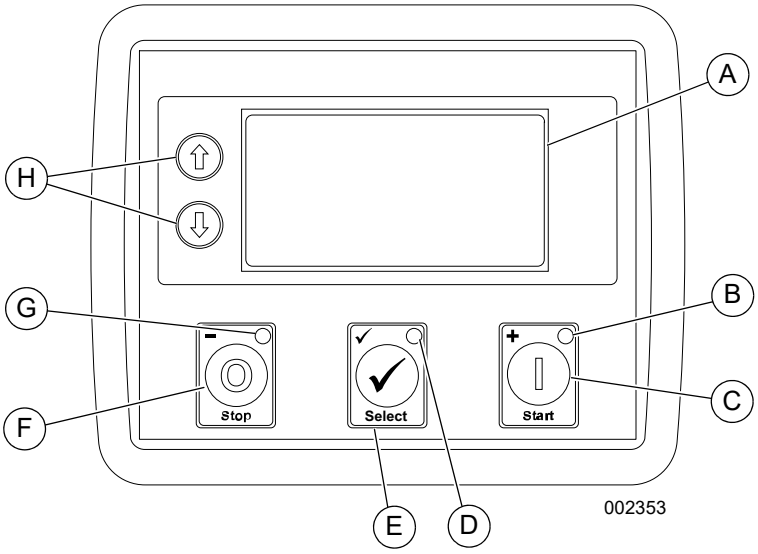


***Figure 2-10. Power Zone Plus Controller***

**(A) Liquid Crystal Display (LCD) Window**

Displays the various operating screens. By viewing these screens, the operator can monitor both the engine and generator status while the unit is running.

**(B) Start LED**

Illuminates when the unit is running in MANUAL mode.

**(C) Start Button**

Starts the engine if there are no shutdown errors and the engine is in “ready to start” status.

**(D) Select LED**

Illuminates when the unit is running in AUTO mode.

**(E) Select Button**

Confirms entries chosen in the various edit menus and screens.

**(F) Stop Button**

Shuts down the unit and puts the controller into STOP mode, whether in MANUAL mode or AUTO mode.

**NOTE:** To prevent damage to the generator and connected equipment, remove all loads from the generator by opening all circuit breakers (turn OFF [O]) before pressing the STOP button.

**(G) Stop LED**

Illuminates when the unit is in STOP mode and flashes when an Electrical Trip and Shutdown Fault has occurred.

**(H) Menu Navigation**

Up/down arrows (↑, ↓) used to navigate through the various operator screens. They are also used to raise and lower the mast on units equipped with an electric winch.

# Operator Screens

See ***Figure 2-11***. The operator screens display the most relevant and critical information an operator will need to properly configure and use the unit. From these six screens, the operator can access information necessary to operate the unit under normal conditions.

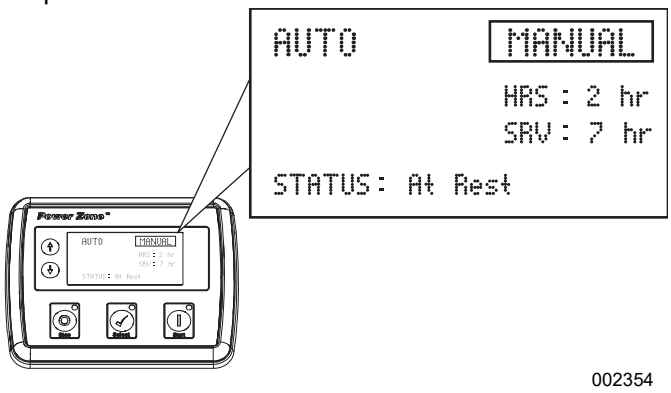


***Figure 2-11. Operator Screens***

### Home Screen

See ***Figure 2-12***. The Home screen is the default screen of the controller and displays after the controller is powered up and the unit management software is loaded. It displays the controller mode, total operating hours, hours left until the next service interval, engine operating status, and engine RPM. If the unit is in AUTO mode, the Home screen may also display whether the scheduler or “dusk to dawn” are enabled.

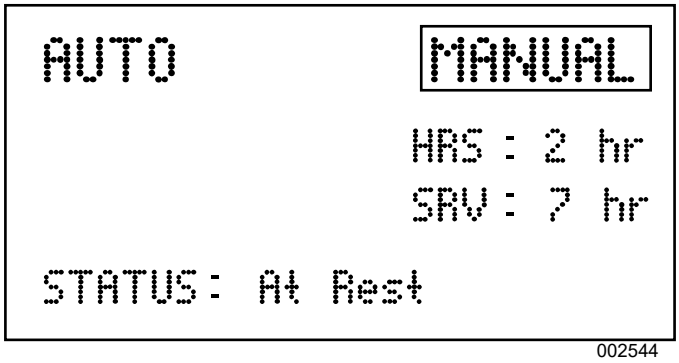


***Figure 2-12. Home Screen***

### Engine Screen

See ***Figure 2-13***. The Engine screen displays battery voltage, oil pressure, coolant temperature and fuel level.

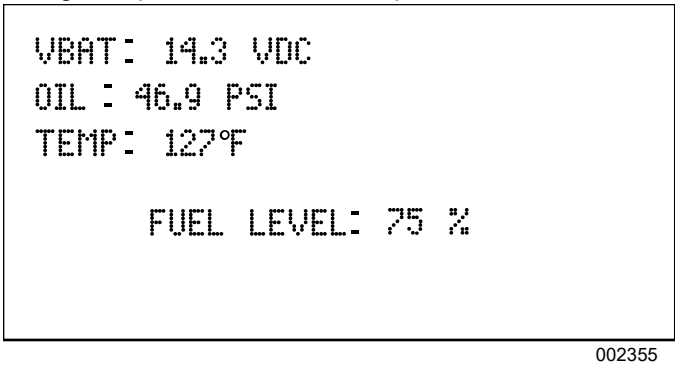


***Figure 2-13. Engine Screen***

- VBAT: Displays engine battery voltage while running. A normal reading is 13.5-15V on 12 volt systems.
- OIL: Displays engine oil pressure. Normal operating pressure is 35–80 psi (241–552 kPa).
- TEMP: Displays engine coolant temperature. Normal operating temperature of the unit is between 100-230°F (38-110°C).

### Lights Screen

See ***Figure 2-14***. The Lights screen enables the operator to turn the lights on and off. Refer to ***Light Operation*** for more information.

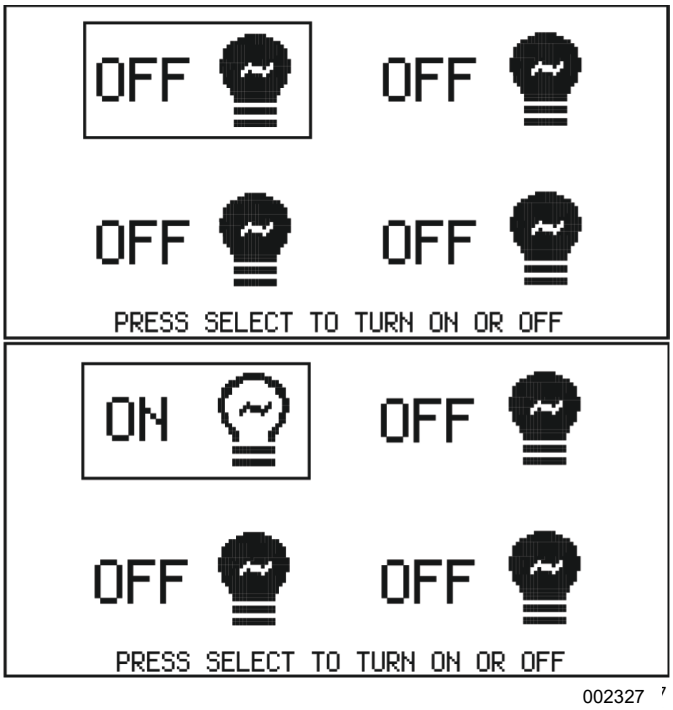


***Figure 2-14. Lights Screen***

### Dusk to Dawn Screen

**NOTE:** This feature only works in AUTO mode and with a photo sensor.

See ***Figure 2-15***. The Dusk to Dawn screen enables or disables the “dusk to dawn” function. This function uses a photo sensor to detect the surrounding light level, automatically starting the engine and turning the lights on at dusk. The engine will run and the lights will remain illuminated until dawn.

For instructions on using the Dusk to Dawn feature, see ***Dusk to Dawn Sensor***.

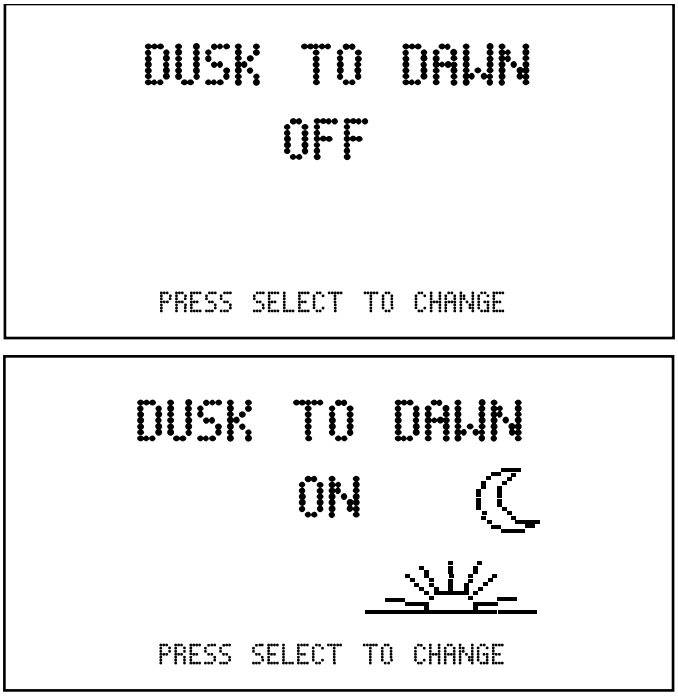


002328

***Figure 2-15. Dusk to Dawn Screen***

### Scheduler Screen

See ***Figure 2-16***. The Scheduler screen enables the operator to program specific times for the lights to turn on and off. Once programmed, the Scheduler will start the engine and illuminate the lights until the designated shutdown time.

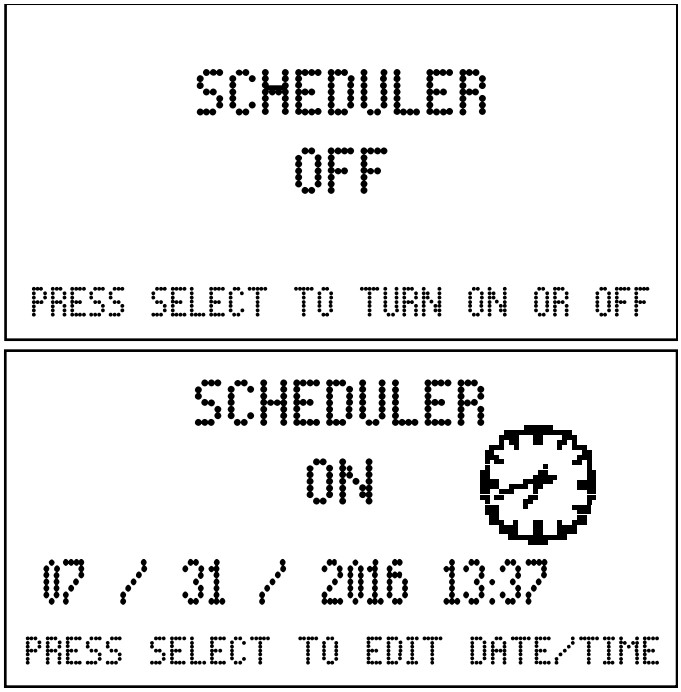


002329

***Figure 2-16. Scheduler Screen***

**NOTE:** This feature will only work in AUTO mode.

### Maintenance Screens

See ***Figure 2-17***. The information displayed on the maintenance screens can be used to identify, diagnose and troubleshoot unit shutdown conditions and poor unit performance.

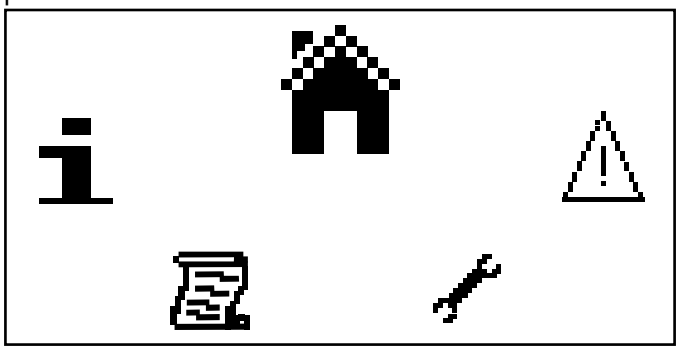

003779

***Figure 2-17. Maintenance Screen***

| Icon | Description |
|---|---|
| | Home screen |
| | Alarms screen |

| Icon | Description |
|---|---|
| | Maintenance screen |
| | Event log screen |
| | About screen |

To enter the navigation menu, use the following procedure:

1. Press both the ↑ and ↓ buttons simultaneously.
2. To select the required icon, press the ↑ button to cycle right and the ↓ button to cycle left until the desired operator screen section is reached.
3. Once the desired icon is at the top, press the Select (✓) button to enter that operator screen section.

**NOTE:** Every time the operator screens are entered, the home icon will be located at the top of the screen.

#### Alarms Screen

See ***Figure 2-18***. The Alarms (⚠) screen displays all the alarms, warnings, and engine Diagnostic Trouble Code (DTC) faults. When an alarm occurs, the controller automatically switches to this screen and remains there until the alarm is cleared. The Stop LED also flashes.

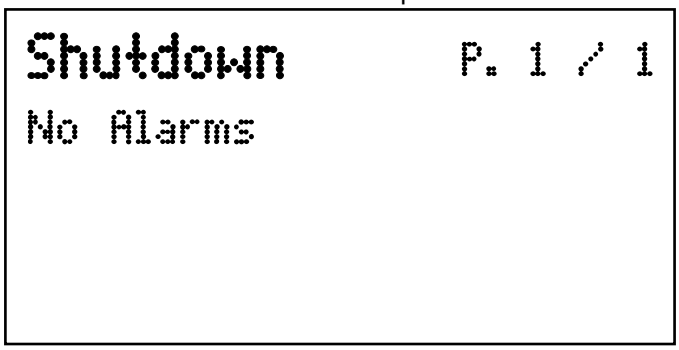


003780

***Figure 2-18. Alarms Screen***

- **Warnings** are non-critical alarm conditions and do not affect the operation of the generator system. They serve to draw the operator's attention to an undesirable condition. By default, warning alarms are self-resetting when the fault condition is removed.
- **Electrical trips** stop the generator in a controlled manner. On initiation of the electrical trip condition, the controller de-energizes all the outputs, including the lights, to remove the load from the generator. Once this has occurred, the controller starts the cooling timer and allows the engine to cool off-load before shutting down the engine.
- **Shutdown alarms** stop the generator immediately. On initiation of the shutdown condition, the controller de-energizes all the outputs, including the lights, to remove the load from the generator. Once this has occurred, the controller shuts the generator set down immediately to prevent further damage.

**DTC faults** are displayed by the controller.

| Fault | DTC Description |
|---|---|
| Check Engine Fault | A fault not recognized by the controller has been detected. Contact the engine manufacturer for support. |
| Low Oil Pressure | Engine oil pressure has fallen below its configured low oil pressure alarm level. |
| Underspeed | Engine speed has fallen below its configured underspeed alarm level. |
| Overspeed | Engine speed has risen above its configured overspeed alarm level. |
| Low Fuel Level | Engine's fuel level has fallen below its configured low fuel level alarm. |
| Battery Under/ Over Voltage | Engine's DC supply has fallen below or risen above its configured alarm level. |

To view the active alarms, repeatedly press the ↑ and ↓ buttons until the LCD window displays the alarm.

Continue to press the ↑ and ↓ buttons to cycle through the alarms.

To exit the alarm screen, press the ↑ and ↓ buttons simultaneously to enter the navigation menu. Once entered, cycle to the desired operator screen.

**NOTE:** The alarm condition must be corrected before a reset will take place. If the alarm condition remains, it is not possible to reset the unit. The exception to this is the Low Oil Pressure alarm and similar 'active from safety on' alarms, as the oil pressure is low with the engine at rest.

To clear alarms that stop the generator, refer to ***Resetting Maintenance Alarms***.

**NOTE:** The LCD backlight is on if the unit has sufficient voltage while the unit is turned on, unless the unit is cranking. In this case, the backlight is turned off.

If the controller is left in STOP mode for a period of inactivity, the controller enters POWER SAVE mode. To 'wake' the controller, press the Stop (O) button.

### Line Amperage Screen

See ***Figure 2-21***. Displays AC output amperage in amps (A). The load balance for each line (L1 and L3) is displayed in both numerical and graphical form. It is important to maintain a balanced load distribution between the lines for optimum generator performance.

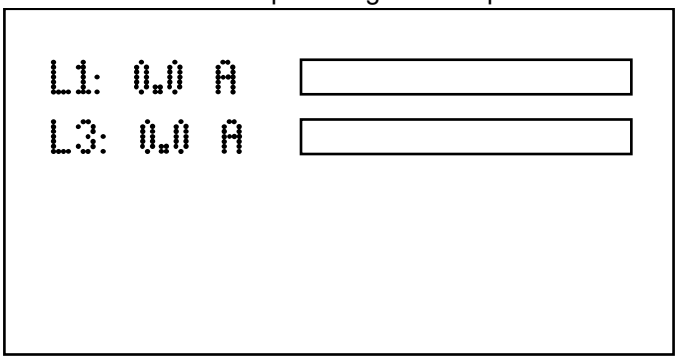


002980

***Figure 2-19. Line Amperage Screen***

### Generator Screen

See ***Figure 2-20***. Displays the average line voltage frequency (Hz) and power factor for the generator while in operation.

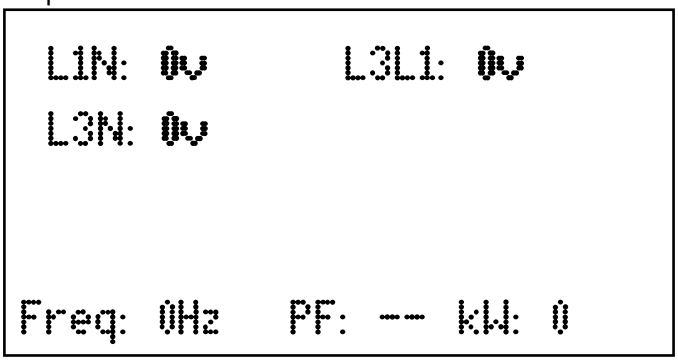


002981

***Figure 2-20. Generator Screen***

### Maintenance Screen

See ***Figure 2-21***. The Maintenance screen (🔧) displays the maintenance alarms configured into the controller. The three alarms are for servicing the fuel filter, oil filter, and air filter.

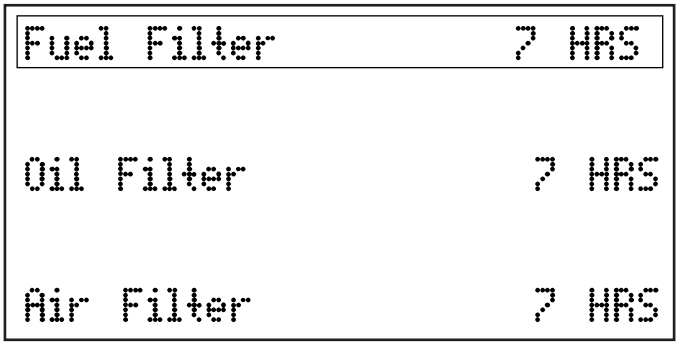


003781

***Figure 2-21. Maintenance Screen***

### Event Log Screen

See ***Figure 2-22***. The controller's event log (📋) displays a list of the last 15 recorded electrical trips or shutdown events and the engine hours at which they occurred. Once the log is full, any subsequent electrical trip or shutdown alarm overwrites the oldest entry in the log. Therefore, the log always contains the most recent shutdown alarms.

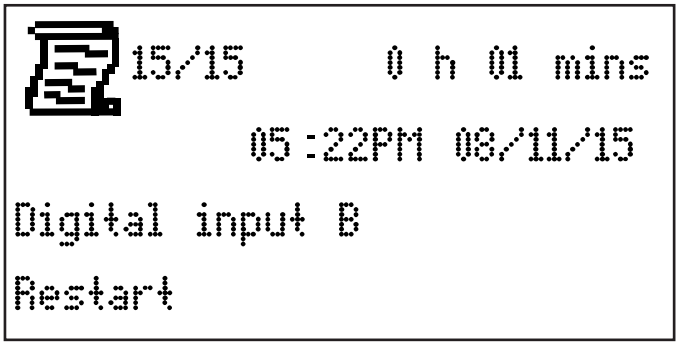


003782

***Figure 2-22. Event Log Screen***

To view the event log:

1. Press both ↑ and ↓ buttons simultaneously to display the navigation menu.
2. Cycle to the event log section and press the Auto button to enter.
3. Repeatedly press the ↑ or ↓ buttons until the LCD window displays the desired event.

Continuing to press down the ↑ or ↓ buttons will cycle through past alarms. Eventually the most recent alarm will display and the cycle begins again.

To exit the event log, press the ↑ and ↓ buttons simultaneously to enter the navigation menu. Once entered, cycle to the desired operator screen.

### About Screen

See ***Figure 2-23***. The About (ℹ) screen contains information about the controller such as the controller's date and time, the product and USB identification number, and the application and engine version.

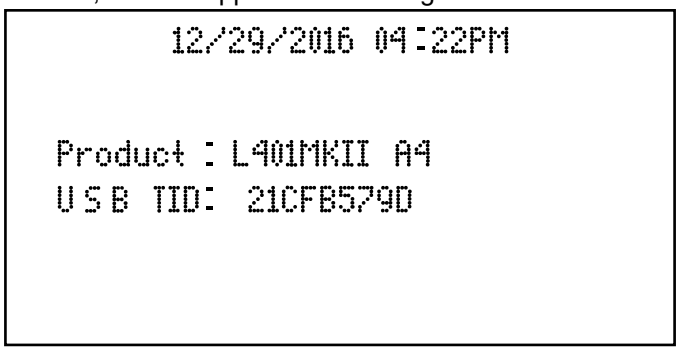


003783

***Figure 2-23. About Screen***

## Containment (If Equipped)

This unit may be equipped with containment. Units equipped with containment are designed to hold 110% of all diesel fuel, engine oil, and coolant. Containment pan can be drained through the containment drain port.

## Diffused Lighting (If Equipped)

See ***Figure 2-24***. This unit may be equipped with diffused lighting.

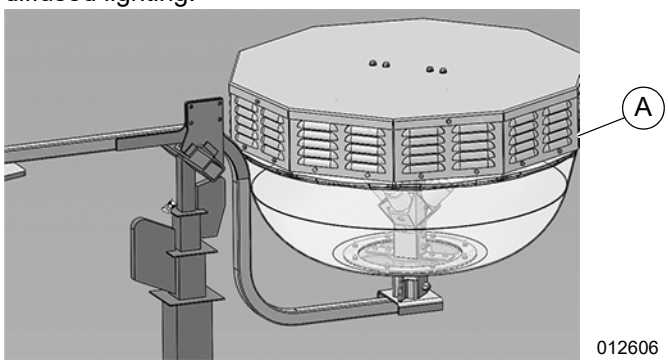


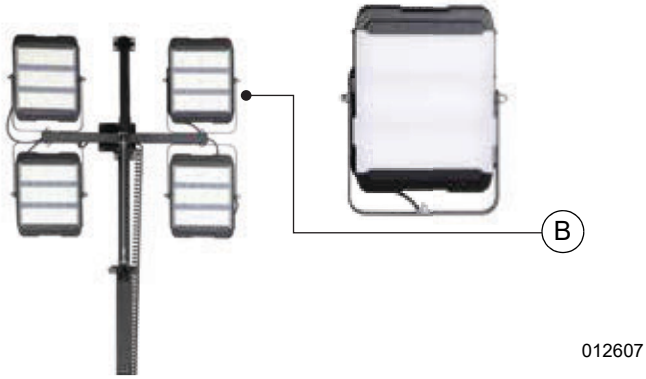


***Figure 2-24. Diffused Lighting—MH and LED Units***

- MH units: One balloon-style diffuser (A).
- LED units: Four diffuse lens covers (B).

**This page intentionally left blank.**

## Unit Setup

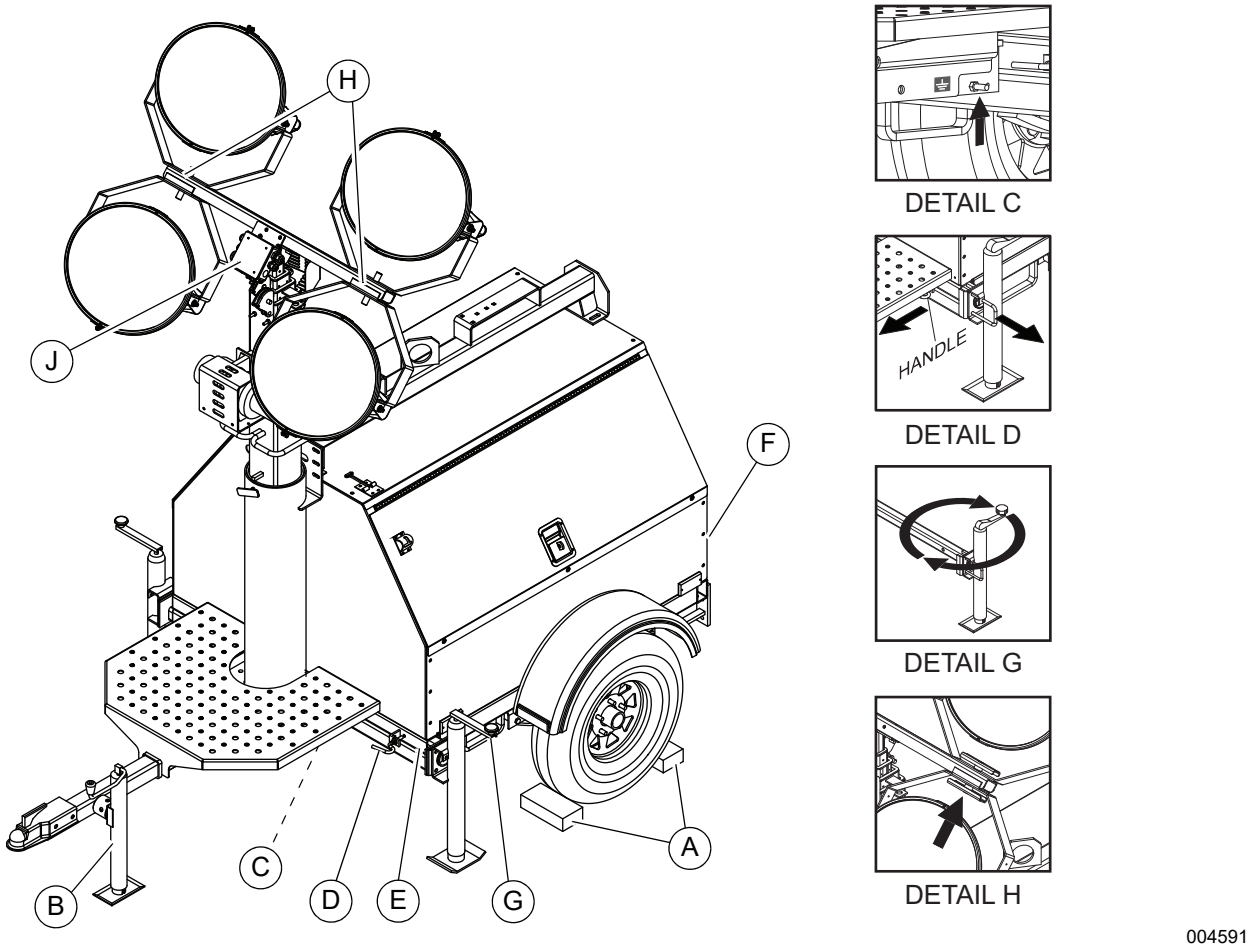


***Figure 3-1. Setup Components***

**DANGER**

High Voltage. Verify area above unit is clear of overhead wires and obstructions. Contact with high-voltage power lines will result in death or serious injury. (000260a)

**WARNING**

> 60 mph

Do not set up the unit if high winds are expected. High winds can cause the unit to tip or fall, causing severe injury or machine damage. (000297)

1. For maximum light coverage, position the unit at ground level, or in a spot higher than the area being illuminated by the lamps.

**NOTE:** See ***Unit Dimensions*** for mast height.

2. See ***Figure 3-1***. Place the unit on firm ground that is relatively flat (less than 5° slope).
3. Block the wheels (A).
4. Pull the locking pin on the tongue jack (B) and rotate the jack 90°. Reinstall the locking pin. Rotate the jack handle clockwise to raise the trailer tongue off the towing vehicle.
5. A grounding stud (C) is located on the frame of the trailer near the trailer tongue. For grounding requirements, follow the National Electrical Code (NEC), state, and local regulations.
6. For each outrigger (E), pull locking pin (D) and pull each outrigger out until the spring loaded locking pin snaps back into place.
7. For each outrigger jack, pull the locking pin and rotate jack 90° until the jack foot faces down and the spring loaded locking pin snaps back into place. Turn each jack handle clockwise until the jack foot firmly contacts the ground.
8. Pull the locking pin on the rear jack (F) and rotate it 90º until the spring loaded locking pin snaps back

into place. Turn the jack handle clockwise until the jack foot firmly contacts the ground.

9. See ***Figure 3-2***. Continue adjusting all jacks until bubbles in both bubble levels are centered in their respective tubes (A).

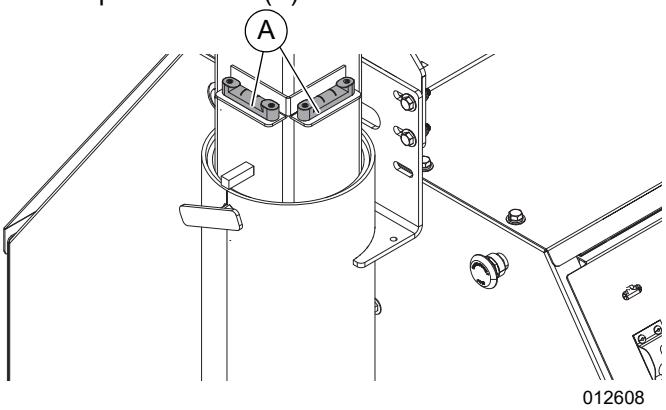


***Figure 3-2. Bubble Levels***

10. See ***Figure 3-1***. Before raising the mast, it may be necessary to adjust the lamps. The lamps may be adjusted up, down, left, or right by loosening the trunnion wing nuts (H) and aiming the lamps in the desired directions. Tighten the hardware completely and make sure the lamps are connected to the junction box (J).

# Pre-start Checklist

Before starting the unit, all items in the pre-start checklist must be completed. This checklist applies to both manual and remote starting of the unit.

**WARNING**

Consult Manual. Read and understand manual completely before using product. Failure to completely understand manual and product could result in death or serious injury. (000100a)

- ❒ Verify all maintenance procedures are up to date. For more information, see ***Maintenance***.
- ❒ The unit must be level.
- ❒ The unit must be dry. Look for water inside or near the unit; dry if needed.
- ❒ For grounding requirements, follow the National Electrical Code (NEC), state, and local.
- ❒ Verify the Control Power switch is in the OFF (O) position.
- ❒ Verify all circuit breakers are in the OFF (O) position.
- ❒ Inspect all electrical cords; repair or replace any that are cut, worn, or bare.
- ❒ Verify all winch cables are in good condition and centered on each pulley. Do not use if cables are kinked or beginning to unravel.
- ❒ Check oil, coolant, and fuel levels. For more information, refer to ***General Maintenance***.
- ❒ Verify battery connections are secure.
- ❒ Turn the battery disconnect switch on, if equipped.
- ❒ Check the engine fan belt tension and condition.
- ❒ Check the engine fan belt guard.
- ❒ Check the engine exhaust system for loose or rusted components.
- ❒ Verify all covers are in place and secure.

# Starting the Unit—Analog Controls

**IMPORTANT NOTE:** For units equipped with Power Zone controls, see ***Starting the Unit—Power Zone (If Equipped)***.

## Raising the Mast

1. Set up and level the unit. See ***Unit Setup***.

**DANGER**

Electrocution. DO NOT use the unit if electrical cord is cut or worn through. Doing so will result in death or serious injury.

(000263a)

**WARNING**

Tipping hazard. Extend the outriggers and level the unit before raising the mast. Keep the outriggers extended while the mast is up. Failure to do so could cause the unit to tip and fall and could result in death or serious injury.

(000266)

2. See ***Figure 3-3***. Check both sets of mast cables for excessive wear or damage. Verify the cables are properly centered in pulleys (A). Check the electrical cord for damage.

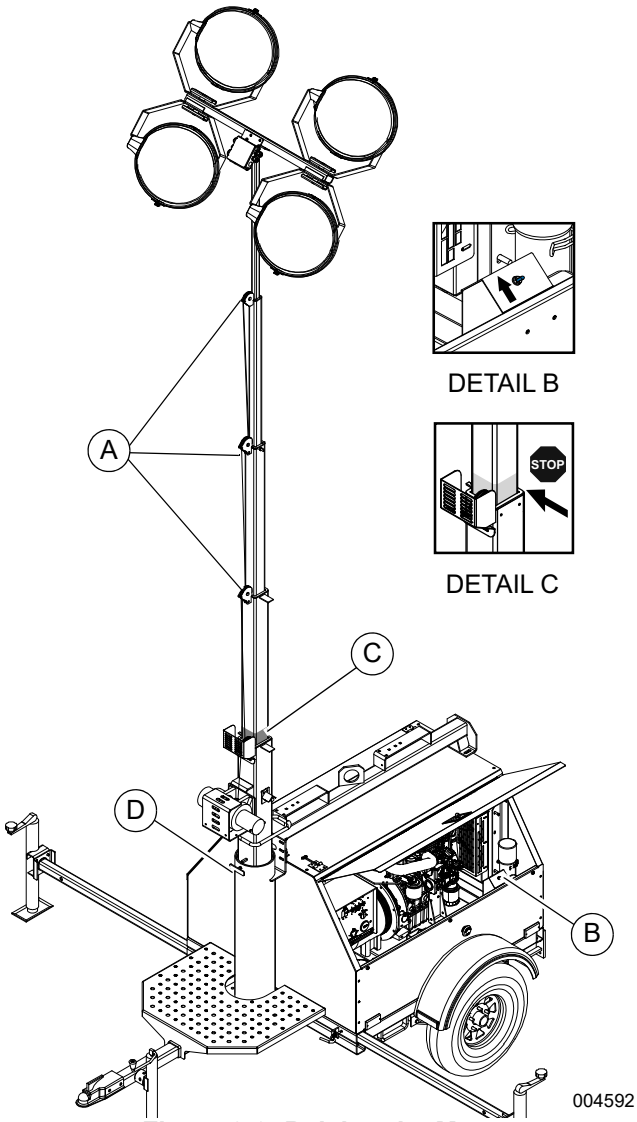


*Figure 3-3. Raising the Mast*

3. Press and hold the winch control toggle switch (B) upward to telescope the mast to the desired height. Extend the mast slowly, verifying the coiled electrical cord is extending at the top sections of the mast.

**IMPORTANT NOTE:** Contact a GMASD immediately if the mast hangs up or the winch cable develops slack.

4. The mast can be rotated by loosening the mast rotation knob at the bottom of the mast (D). Turn the mast until the lights face in the desired direction and then tighten the knob.

**⚠WARNING**

Tipping hazard. Do not extend the mast beyond the colored mark on the second mast section. The unit can become unstable and tip or fall, causing injury.

(000262)

**⚠WARNING**

Personal Injury. Stop immediately if the mast hangs up or the winch cable develops slack. Excess slack could cause the mast to collapse, resulting in personal injury or equipment damage. (000265)

**⚠WARNING**

Personal injury or equipment damage. Do not raise or lower the mast while the unit is operating. Doing so can break the lenses and cause the lamps to shatter.

(000279)

## Starting the Engine

**NOTE:** If the engine was run out of fuel or the fuel tank was drained, it may be necessary to bleed the fuel lines. Refer to the engine operator's manual supplied with the unit.

1. See ***Figure 3-4***. Verify the main circuit breaker and individual circuit breakers for each of the lights are OFF (O).

**⚠WARNING**

Equipment Damage. Never start the engine with circuit breakers switched on. Any load connected to the generator at start up will cause severe damage or destroy the generator. (000368)

**NOTE:** If the red light on the control panel TURN MAIN BREAKER OFF is illuminated when the key is turned to the START position, the breaker is closed (switched on) and must be turned OFF (O).

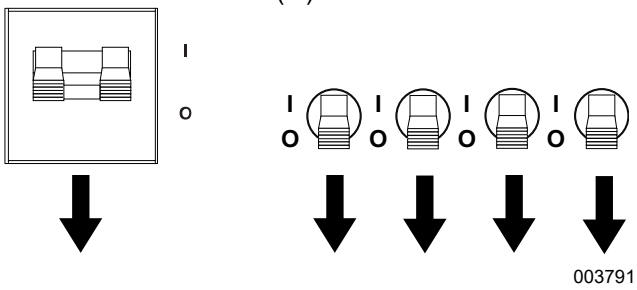


*Figure 3-4. Circuit Breakers in OFF (O) Position*

2. See ***Figure 3-5***. Turn the key on the Engine Start switch to the left GLOW PLUG position and hold the key in place for 10-15 seconds or until the glow

plug indicator turns red. (Kubota units do not have a glow plug indicator.)

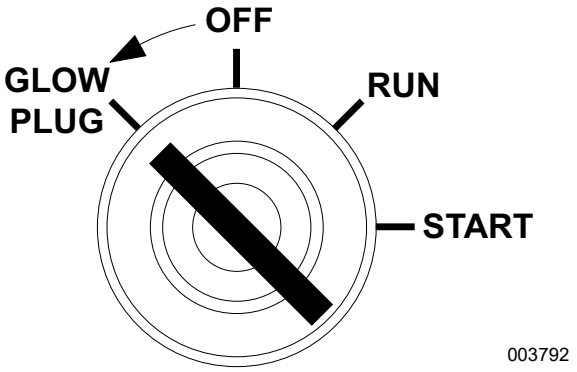


*Figure 3-5. Activate Glow Plug*

3. See ***Figure 3-6***. Turn the key to the right START position and hold it until the engine cranks and starts running.

**⚠CAUTION**

Equipment Damage. Do not continuously crank engine for more than ten seconds. Doing so will lead to overdischarge of batteries and starter seizure.

(000230)

**NOTE:** For cold weather conditions, refer to the engine operator's manual for appropriate glow plug interval.

**NOTE:** If oil pressure is not obtained within 15 seconds after the key is switched to the RUN position, the low oil automatic shutdown will turn off the fuel supply, stopping the engine. Check the oil level and turn the key to the OFF position to reset the oil pressure timer before attempting to restart the engine.

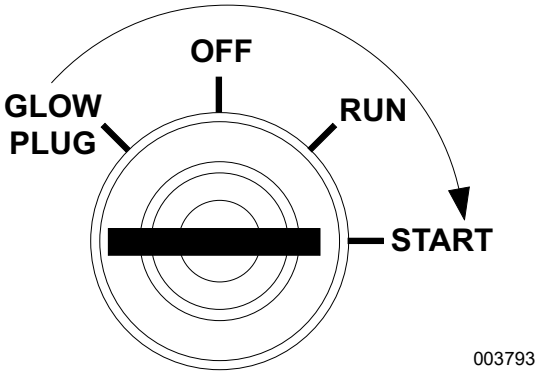


*Figure 3-6. Crank Engine*

4. See ***Figure 3-7***. Release the key, it will move to the RUN position.

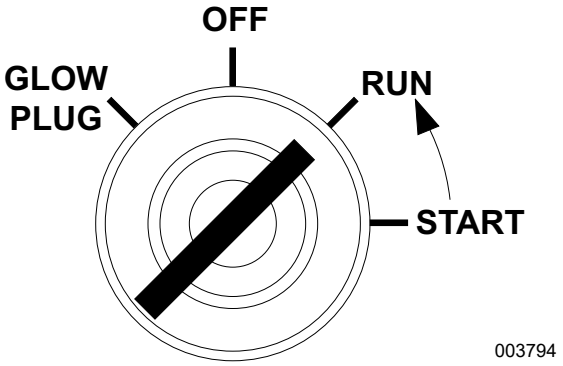


*Figure 3-7. Release Key*

5. Once the engine is running, allow it to reach normal operating temperature before switching on any loads.

## Operating the Lights

**⚠WARNING**

Burn hazard. Never operate lights with a damaged or missing lens cover. Lamps are hot and pressurized while in use. Unprotected lamps can shatter, causing severe injury.

(000277)

1. Verify the unit is on and running smoothly.
2. See ***Figure 3-8***. Switch the main circuit breaker (A) ON (I).
3. Switch the individual circuit breakers for the lights (B) to the ON (I) position, one at a time.
4. The ballast indicator lights (C) will turn on and continue to get brighter as the lights warm up, and then remain on. This confirms power is coming from the ballasts to the lights.

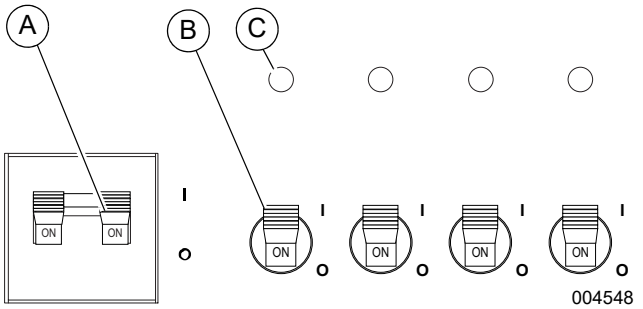


*Figure 3-8. Light Switches and Breaker*

**NOTE:** If an indicator light does not turn on, see ***Troubleshooting*** or contact a GMASD.

**NOTE:** Metal halide lights require 5–15 minutes of warming to reach full illumination. When the lights are OFF, approximately ten minutes of cooling is required before they can be switched ON again.

**NOTE:** Metal halide light towers are equipped with four 1,100 W bulbs. When checking or replacing metal halide

bulbs, wipe them with a clean cloth to avoid leaving any grease, oil residue or fingerprints on the glass. Any residue can create a hot spot on the bulb, causing premature bulb failure.

**WARNING**

Burn hazard. Lamps become extremely hot while in use. Allow 10–15 minutes for cooling before handling or lowering mast. Touching a hot lens or fixture can cause severe burns.

(000278)

## Starting the Unit—Power Zone (If Equipped)

**NOTE:** For units equipped with analog controls, see ***Starting the Unit—Analog Controls***.

### Raising the Mast

1. Set up and level the unit. See ***Unit Setup***.

**DANGER**

Electrocution. DO NOT use the unit if electrical cord is cut or worn through. Doing so will result in death or serious injury.

(000263a)

**WARNING**

Tipping hazard. Extend the outriggers and level the unit before raising the mast. Keep the outriggers extended while the mast is up. Failure to do so could cause the unit to tip and fall and could result in death or serious injury.

(000266)

2. See ***Figure 3-9***. Check both sets of mast cables for excessive wear or damage. Verify the cables are properly centered in the pulleys (A). Check the electrical cord for damage.

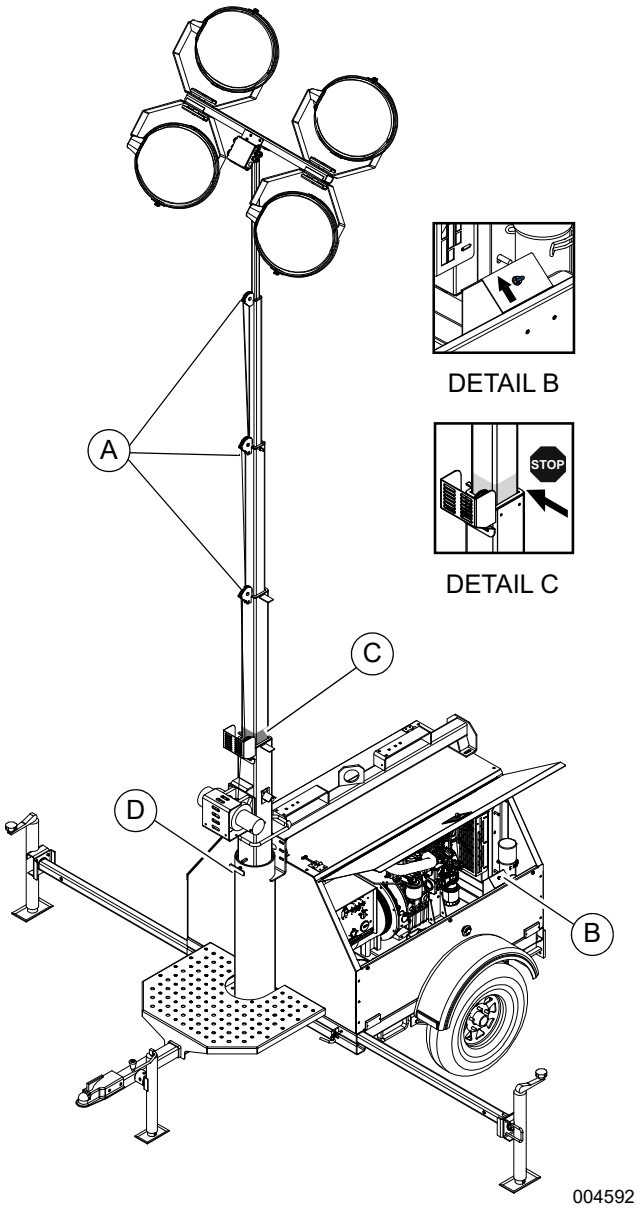


***Figure 3-9. Raising the Mast***

3. Press and hold the winch control toggle switch (B) upward to telescope the mast to the desired height. Extend the mast slowly, verifying the coiled electrical cord is extending at the top sections of the mast.

**IMPORTANT NOTE:** Contact a GMASD immediately if the mast hangs up or the winch cable develops slack.

4. The mast can be rotated by loosening the mast rotation knob at the bottom of the mast (D). Turn the mast until the lights face in the desired direction and then tighten the knob.

**⚠WARNING**

Tipping hazard. Do not extend the mast beyond the colored mark on the second mast section. The unit can become unstable and tip or fall, causing injury. (000262)

**⚠WARNING**

Personal Injury. Stop immediately if the mast hangs up or the winch cable develops slack. Excess slack could cause the mast to collapse, resulting in personal injury or equipment damage. (000265)

**⚠WARNING**

Personal injury or equipment damage. Do not raise or lower the mast while the unit is operating. Doing so can break the lenses and cause the lamps to shatter. (000279)

## Preparing for Start-Up

**NOTE:** If the engine was run out of fuel or the fuel tank was drained, it may be necessary to bleed the fuel lines before starting. Refer to the engine manual supplied with the unit.

**NOTE:** STOP mode is the default start-up mode for all units equipped with the Power Zone Plus controller.

### Select AUTO or MANUAL Mode

See ***Figure 3-10***. Using the arrows on the controller, select either AUTO or MANUAL on the Home screen.

- AUTO mode is required for programming automatic start and stop times (see ***Scheduler Screen***), or enabling the photo-sensor (see ***Scheduler Screen***).
- MANUAL mode is used for on-demand control of the lights and convenience outlets.

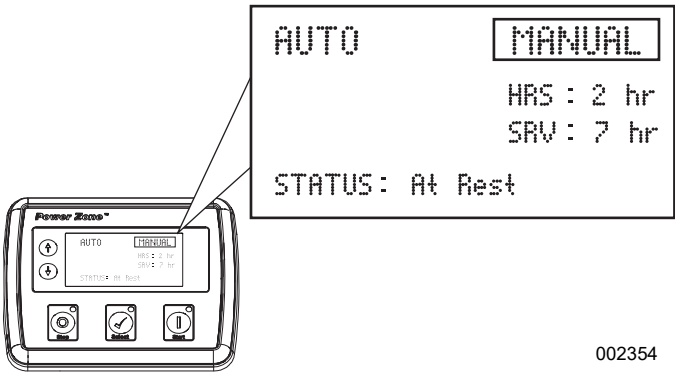


***Figure 3-10. Selecting MANUAL or AUTO Mode***

### Configure for Intended Use

As described in “General Information”, the engine in this unit runs at low speed when the LED lights are operating and no loads are connected to the 120 or 240V convenience outlets. The engine runs at high speed when the LED lights are turned off. Therefore, before starting, determine if auxiliary equipment will be connected to the convenience outlets. Then set up the unit based on the intended use:

- LED Lights Only: Turn the 240 VAC outlet breaker OFF. The engine will run at low speed while operating, greatly reducing sound emissions and fuel consumption.
- LED Lights and Export Power: Turn the 240 V outlet breaker ON and Load Sense OFF. The engine will run at high speed for powering high amperage equipment.
- LED Lights and Export Power with Load Sense: Turn the 240 VAC outlet breaker ON and Load Sense ON. The engine will run at high speed when detecting applied load(s) such as hand tools and low amperage equipment.

The table below shows the four possible combinations of the 240 VAC outlet breaker and Load Sense switch positions.

| | | **Load Sense Switch** | |
|---|---|---|---|
| | | **ON** | **OFF** |
| **240 VAC Outlet Breaker** | **ON** | Load dependent—variable speed* | High speed |
| | **OFF** | Low speed | Low speed |

**Engine speed increases as more power is drawn from the convenience outlets.*

## Manually Starting the Unit

Use the following procedure to start the generator in MANUAL mode.

1. Verify the 240 VAC outlet breaker is OFF (O).
2. Switch the main circuit breaker ON (I).
3. When the controller powers up, the Home screen displays on the LCD screen and the Stop LED illuminates to indicate that the controller is in STOP mode. Press the Start button to initiate the startup procedure. Assuming there are no existing engine faults, the engine will start and the Start LED will illuminate.

**NOTE:** The engine can be started from any screen. It may take a few seconds for the engine to run smoothly and reach its governed operating speed.

4. If the engine does not start after the first cranking attempt, the engine will pause for 15 seconds to allow the starter to cool. The controller backlight will go out. The engine will make two more attempts to start for a total of three crank cycles.
5. If the engine does not start and run within three starting cycles, the LCD screen will display the “Fail to Start” alarm. The starting sequence can be repeated after the starter cools for at least two

minutes. Pressing the Stop (O) button will clear the alarm and reset the controller.

## Light Operation

**⚠WARNING**

Burn hazard. Never operate lights with a damaged or missing lens cover. Lamps are hot and pressurized while in use. Unprotected lamps can shatter, causing severe injury.

(000277)

**⚠WARNING**

Burn hazard. Lamps become extremely hot while in use. Allow 10–15 minutes for cooling before handling or lowering mast. Touching a hot lens or fixture can cause severe burns.

(000278)

See ***Figure 3-11***. The lights are turned on and off using the controller. To view the light screen, press the ↑ button three times from the Home screen.

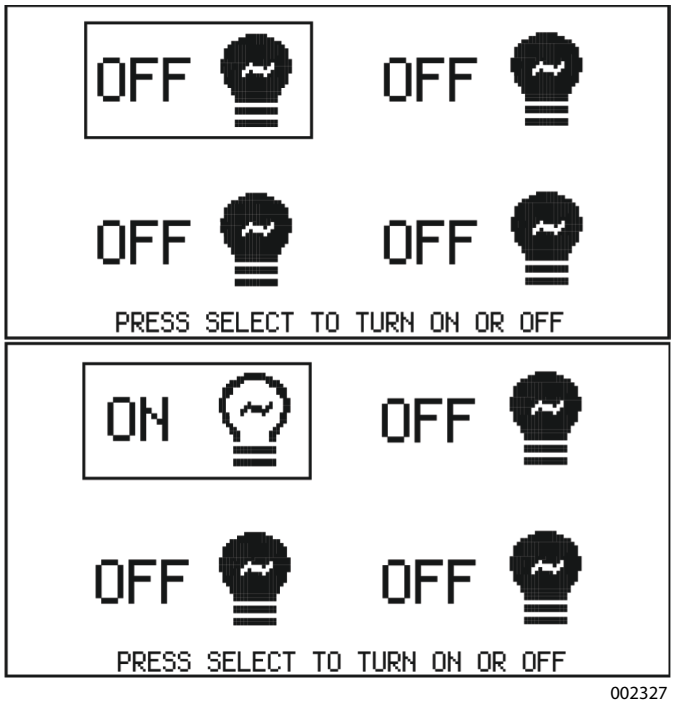


***Figure 3-11. Lights Screen***

**NOTE:** The lights can only be turned ON and OFF while the unit is running in MANUAL mode. They operate automatically in AUTO mode.

1. Once the engine is up to temperature and running smoothly, switch the main circuit breaker ON (I).
2. To turn the light(s) ON, press the Select (✓) button. To turn the light(s) OFF, press the Select (✓) button.

**NOTE:** The lights require a warm up period of 5-15 minutes before they reach full output. If the lights are shut down, they require a cool down period of approximately 10 minutes before they can be switched on again.

**NOTE:** The light tower uses four 1, 000 W or 1,050 W bulbs. When checking or replacing the bulbs, wipe them with a clean cloth to avoid leaving any grease, oil residue, or fingerprints on the glass. Any residue can create a hot spot on the bulb, causing premature bulb failure.

## Dusk to Dawn Sensor

This unit is equipped with a “dusk to dawn” photo sensor that detects the light level, automatically starting the engine and turning on the lights at dusk. The engine runs and the lights are illuminated until dawn.

To prepare the sensor for use, perform the following procedure at the time of day you want the lights to turn on:

1. Loosen (do not remove) screws securing Night Watchman shield. Completely lower the shield.
2. Switch Power Zone controller to ON. Set unit to AUTO mode.
3. On the controller, access the Dusk to Dawn screen.
4. On the Dusk to Dawn screen, verify setting is ON.
5. Slowly raise the Night Watchman shield, stopping when either of the following occurs.
   - Controller indicates unit wants to start
   - An audible alarm sounds
6. Tighten screws loosened in step 1.
7. Allow unit to start. Verify lights are on. Adjust settings as necessary.
8. Stop engine.
9. Leave controller ON. Verify unit is in AUTO mode (as indicated by a lighted amber LED).

## Lowering the Mast—Automatic

**⚠WARNING**

Burn hazard. Lamps become extremely hot while in use. Allow 10–15 minutes for cooling before handling or lowering mast. Touching a hot lens or fixture can cause severe burns.

(000278)

1. Shut down the lights and engine. See ***Shutting Down the Unit—Standard Controls***.
2. If the trailer is going to be moved, it is recommended that the mast is turned so the lights face toward the back of the unit. To rotate the mast:
   a. Loosen the mast rotation knob.
   b. Rotate the mast until the white arrows are aligned and the metal stop tabs are touching. The winch and lights should be facing toward the back of the unit.
   c. Tighten the mast rotation knob.
3. Press and hold the winch control toggle switch downward to collapse the mast to its lowest

position. Verify the electrical cord does not get caught in, or pinched by, the mast while it is being lowered.

**WARNING**

Personal Injury. Stop immediately if the mast hangs up or the winch cable develops slack. Excess slack could cause the mast to collapse, resulting in personal injury or equipment damage. (000265)

**IMPORTANT NOTE:** Contact a GMASD immediately if the mast hangs up or the winch cable develops slack.

**NOTE:** If the generator is not operational, and the batteries do not have enough power to lower the mast, it may be necessary to lower the mast manually.

**NOTE:** Generac Mobile strongly recommends that the lights be removed from the mast and stowed for transportation.

## Voltage Regulator (If Equipped)

The MLT4150 may be equipped with an electronic voltage regulator. The voltage regulator controls the output of the generator by regulating the current into the exciter field. The voltage regulator is adjusted before shipment from the factory.

**IMPORTANT NOTE:** Contact Generac Mobile for additional information before attempting to adjust the voltage regulator.

## Convenience Outlets

The receptacle panel is equipped with six receptacles for running accessories or tools from the generator. Power is supplied to the receptacles any time the engine is running and the main circuit breaker is switched to the ON (I) position.

See ***Figure 3-12***. The standard receptacle panel is equipped with the illustrated convenience outlets:

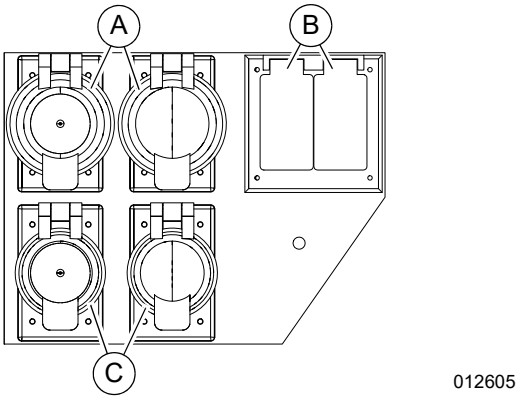


***Figure 3-12. Convenience Outlets***

| | |
|---|---|
| A | 240 V, 30 A, twist-lock outlet (L14-30R) |
| B | 120 V, 20 A, GFCI, duplex outlet (5-20R, UL 2003) |
| C | 240 V, 50 A, twist-lock outlet |

**IMPORTANT NOTE:** This unit may be equipped with optional receptacles. Examine receptacle panel to verify equipment. See ***Wiring Diagrams*** for more information.

**NOTE:** For units equipped with metal halide lights: When the lights are on, do not load any outlet with more than 1,000 W. Loading an outlet with more than 1,000 W overloads the generator, tripping the main circuit breaker.

**NOTE:** If the breaker is tripped:

1. Switch all lights to OFF.
2. Reduce load on overloaded outlet to less than 1,000 W.
3. Wait 10 minutes for bulbs to cool (metal halide only).
4. Switch breaker to ON (I).
5. Switch lights to ON.

**NOTE:** With all of the lights off, the full generator output may be used with the 240 V twist-lock outlet.

## Wet Stacking

The unit is powered by a diesel engine. Diesel engines are susceptible to wet stacking if lightly loaded. Wet stacking can occur when an engine is run at less than 30% of its full load capacity, causing unburned fuel to accumulate in the engine. Wet stacking can be detected by continuous black exhaust when the unit is under a constant load. It can also cause fouling of injectors and buildup on engine valves. Diesel engines operate properly when applied loads are between 30% and 100% of system capacity. Appropriate generator sizing is determined by the anticipated load. If wet stacking conditions have been experienced, consider applying heavy load on the unit for at least five hours.

**NOTE:** The recommended method to help clear the results of wet stacking is to load the unit through receptacle power AND by switching the lights to ON.

## Shutting Down the Unit—Standard Controls

Check with personnel using power supplied by the unit and let them know the power is going to be turned off. Make sure the power shutdown will not create any hazards by accidentally turning off equipment that needs to remain running (pumps, compressors, lights, etc.).

1. Remove all loads from the outlets.
2. See ***Figure 3-13***. Switch the individual circuit breakers for each light OFF (O).

3. Switch the main circuit breaker OFF (O).
4. Move the control power switch to STOP.

**NOTE:** For extended storage time, disconnect the battery. For extended storage requirements, refer to the engine operator's manual.

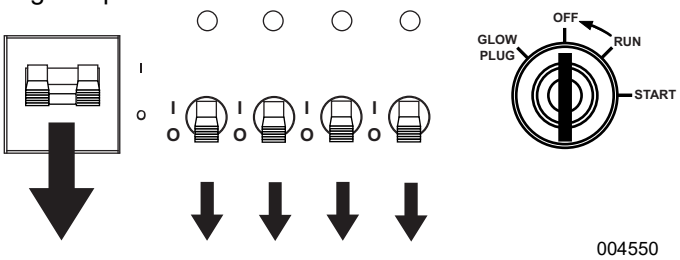


*Figure 3-13. Shutting Down*

### Lowering the Mast—Automatically

**WARNING**

Burn hazard. Lamps become extremely hot while in use. Allow 10–15 minutes for cooling before handling or lowering mast. Touching a hot lens or fixture can cause severe burns. (000278)

1. Shut down the lights and engine. See ***Shutting Down the Unit—Standard Controls***.
2. If the trailer is going to be moved, it is recommended that the mast is turned so the lights face toward the back of the unit. To rotate the mast:
   a. Loosen the mast rotation knob.
   b. Rotate the mast until the white arrows are aligned and the metal stop tabs are touching. The winch and lights should be facing toward the back of the unit.
   c. Tighten the mast rotation knob.
3. Press and hold the winch control toggle switch downward to collapse the mast to its lowest position. Verify the electrical cord does not get caught in, or pinched by, the mast while it is being lowered.

**WARNING**

Personal Injury. Stop immediately if the mast hangs up or the winch cable develops slack. Excess slack could cause the mast to collapse, resulting in personal injury or equipment damage. (000265)

**IMPORTANT NOTE:** Contact a GMASD immediately if the mast hangs up or the winch cable develops slack.

**NOTE:** If the generator is not operational, and the batteries do not have enough power to lower the mast, it may be necessary to lower the mast manually.

**NOTE:** Generac Mobile strongly recommends that the lights be removed from the mast and stowed for transportation. See ***Towing the Unit***.

## Lowering the Mast—Manually

**WARNING**

Burn hazard. Lamps become extremely hot while in use. Allow 10–15 minutes for cooling before handling or lowering mast. Touching a hot lens or fixture can cause severe burns. (000278)

**NOTE:** Do not use this procedure unless it is absolutely necessary. Continuous use of this procedure could damage the planetary gear brake of the winch. This procedure will not work if the planetary gear brake is damaged.

1. See ***Figure 3-14***. Remove the power cables from the two terminals on the winch motor assembly (A).

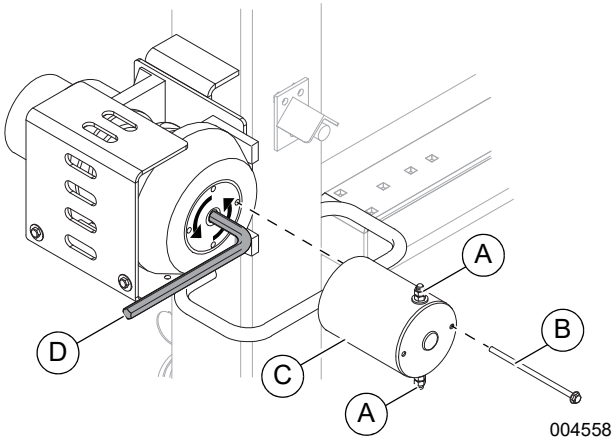


*Figure 3-14. Winch Assembly*

2. Remove the two flange head screws (B) securing the winch motor assembly to the winch. Retain the screws for reassembly.
3. Carefully remove the motor assembly (C), making sure the two pieces do not separate.
4. Insert a 3/8 in. hex-wrench (D) into the sleeve bearing.
5. Rotate the wrench counter-clockwise to lower the mast. If slack develops in the cable, stop immediately and remove the slack.
6. When the mast is completely down, install the winch motor assembly, securing it with the screws.

## Shutting Down the Unit—Power Zone Controls (If Equipped)

Check with personnel using power supplied by the unit and let them know the power is going to be turned off. Verify the power shutdown will not create any hazards by accidentally turning off equipment that needs to remain running (pumps, compressors, lights, etc.).

1. Remove all loads from the receptacles.
2. Switch the lights off using the controller.
3. Switch the outlet breaker to the OFF (O) position.
4. Press the Stop (O) button.
5. After the unit shuts down, move the Control Power switch to the OFF (O) position.

**NOTE:** Disconnect the battery if the unit is to be stored for an extended period. Refer to the engine operator's manual for additional extended storage procedures.

## Automatic Shutdown

This unit is equipped with a low oil pressure and high coolant temperature automatic shutdown system. This system will automatically shut off the fuel supply to stop the engine if oil pressure drops too low or the engine exceeds normal operating temperature. Return the main circuit breaker to the OFF (O) position to reset the unit after the cause of shutdown has been determined.

## Emergency Stop Switch

**⚠CAUTION**

Equipment Damage. The emergency stop switch is not to be used to power down the unit under normal operating circumstances. Doing so could result in equipment damage. (000246b)

See ***Figure 3-15***. This unit is equipped with an E-stop switch. The red button is clearly marked EMERGENCY STOP.

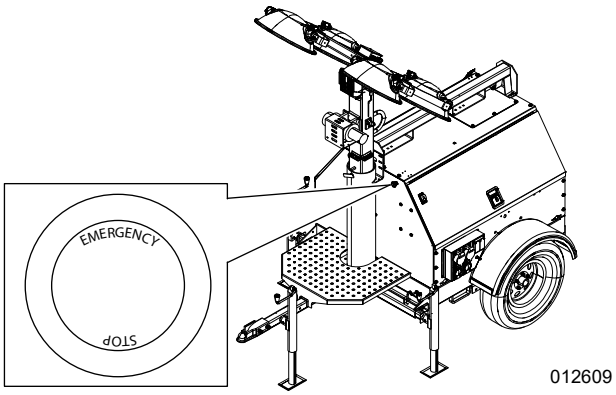


***Figure 3-15. E-Stop Switch***

This trips the main circuit breaker, which will open the contact and disconnect the load to the connection lugs. An emergency stop also opens the fuel circuit, shutting down the engine. In units equipped with Power Zone controls, the emergency stop fault displays on the control panel.

- To activate the E-stop, push the button until it locks down.
- To deactivate the E-stop, twist the button until it unlocks and pops up.

## Remote Start Terminal Block

See ***Figure 3-16***. The remote start terminal block provides a connection for installation of a remote start switch, which allows unit startup through a remote dry-contact closure switch.

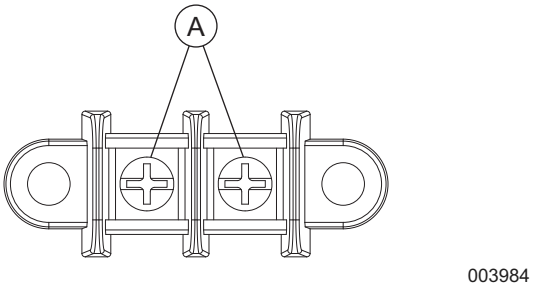


***Figure 3-16. Remote Start Terminal Block***

**NOTE:** For location of the remote start terminal block, see ***Figure 2-5***.

- Before entering AUTO mode, verify the contacts on any remote switch linked to the unit are OPEN. If the contacts are closed, the engine will crank and start when AUTO mode is entered.
- Attach switch leads to the two unused terminals on the remote start terminal block.

## Towing the Unit

Once the engine is shut down and the mast and lights are properly stowed, follow these steps to prepare the unit for towing.

1. Raise the rear jack completely and release the locking pin to rotate it up into the travel position. Verify the locking pin snaps into place.
2. Raise the outrigger jacks completely and release the jack locking pin to swing the jacks up into the travel position. Verify the locking pins snap into place. Release the outrigger locking pins and slide the outriggers into the trailer frame until the locking pins snap into place.
3. Use the tongue jack to raise or lower the trailer onto the hitch of the towing vehicle. Lock the hitch coupling and attach the safety chains or cables to the vehicle. Remove the jack locking pin and rotate the jack into the travel position. Replace the locking pin.

**NOTE:** A film of grease on the coupler will extend coupler life and eliminate squeaking. Wipe the coupler clean and apply fresh grease each time the unit is towed.

4. To ensure proper operation of the jacks, lubricate the grease fittings located on the leveling jacks. Refer to ***Jack Maintenance***. For maintenance interval information, refer to ***Basic Maintenance Schedule***.

5. Connect any trailer wiring to the tow vehicle. Check for proper operation of the directional and brake lights.
6. Verify the cradle locking pin is in place.
7. Verify the doors and enclosure are properly latched.
8. If driving over rough ground, remove the bulbs from the light fixtures.
9. Check for proper inflation of the trailer tires. For maximum tire pressures, refer to ***Specifications***.
10. See ***Figure 3-17***. Check the wheel lugs. Tighten or replace any lugs that are loose or missing. If a tire has been removed for axle service or replaced, tighten the lugs, in the order shown, to the following specifications.

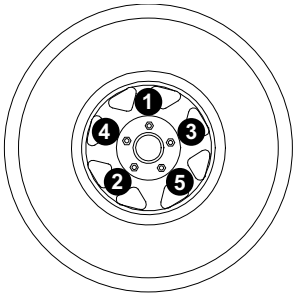


***Figure 3-17. Tightening Wheel Lugs***

   a. Start all lug nuts by hand.
   b. First pass: Tighten to 20–25 ft-lb (27–33 Nm).
   c. Second pass: Tighten to 50–60 ft-lb (67–81 Nm).
   d. Third pass: Tighten to 90–120 ft-lb (122–162 Nm).

**NOTE:** After the first road use, re-torque the lug nuts in sequence.

11. Maximum recommended speed for highway towing of single (non-tandem) units is 55 mph (88.5 km/h). Recommended off-road towing speed is not to exceed 10 mph (16 km/h) or less, depending on the terrain.

# Tying Down The Unit

See ***Figure 3-18***. The unit is equipped with four tie-down points—two on each side (A).

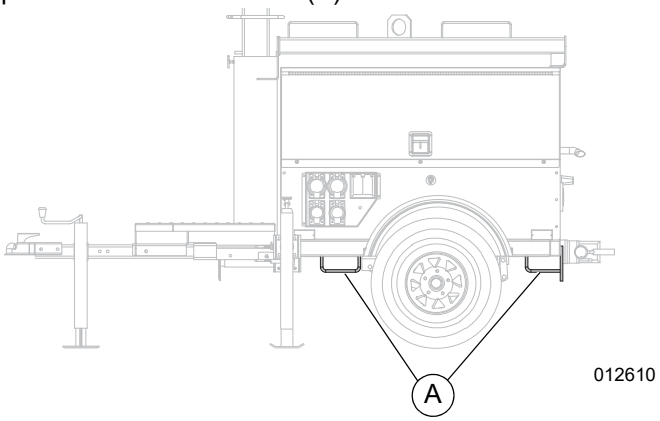


***Figure 3-18. Tie-Down Points***

When securing the unit for transportation, verify the equipment being used to fasten the unit is in good condition and has sufficient strength to hold the unit in place during transport.

# Lifting the Unit

**WARNING**

Personal Injury. Do not use lifting eye if there are signs of damage or corrosion. Doing so could result in death, serious injury, or property damage.

(000433)

**WARNING**

Personal Injury. Do not use lifting eye other than as directed. Doing so could result in death, serious injury, or property damage.

(000434)

1. Verify lifting equipment is in good condition and has sufficient load-bearing capacity.

**NOTE:** See ***Specifications*** for unit weight.

2. Close and lock all hoods and doors.

3. See ***Figure 3-19***. Stow the lights in the travel position, as illustrated (A).

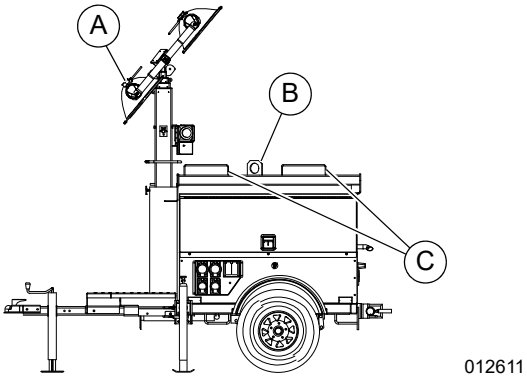


***Figure 3-19. Lifting the Unit***

**IMPORTANT NOTE:** Always be aware of people and objects around the unit—when preparing, maneuvering, or lifting the unit.

4. Attach any slings, chains, or hooks directly to the central lifting point (B).
5. Use the forklift pockets (C) with care. Approach the unit as perpendicular as possible to avoid damaging the unit. Verify any obstructions are clear of the forklift tines before lifting.

## Emissions Information

For warranty information, please refer to the diesel engine manual supplied with this unit.

## Daily Walk-Around Inspection

Perform a walk-around inspection of the unit every day before starting the unit. Look for conditions that could hinder performance or safety, such as (but not limited to):

- Oil, coolant and fuel leakage
- Blocked vents
- Loose or missing hardware
- Loose or broken electrical connections.

Inspect the fan belt for cracks, fraying, or stretching. Verify the belt is properly seated in the pulley grooves. Replace the belt according to the manufacturer's recommendations.

**⚠CAUTION**

Equipment Damage. Failure to perform a daily inspection could result in damage to the unit.

(000306)

## General Maintenance

Poorly maintained equipment can become a safety hazard. In order for the equipment to operate safely and properly over a long period of time, periodic maintenance and occasional repairs are necessary. **DO NOT** perform routine service (oil and filter changes, cleaning, etc.) unless all electrical components are shut off.

Regular maintenance will improve performance and extend engine/equipment life. Generac Mobile recommends that all maintenance work be performed by a GMASD. Regular maintenance, replacement or repair of the emissions control devices and systems may be performed by any repair shop or person of the owner's choosing. However, to obtain emissions control warranty service free of charge, the work must be performed by a GMASD or authorized engine dealer depending on the repair. See the emissions warranty.

### Preparing for Service

Before servicing the unit, always follow the instructions listed below.

1. Verify the Control Power switch is in the OFF (O) position.
2. Verify the circuit breakers are switched OFF (O).
3. Disconnect the negative (–) terminal on the battery.
4. Attach a "Do Not Start" sign to the control panel. This will notify everyone that the unit is being serviced and will reduce the chance of someone inadvertently trying to start the unit.

### Cleaning the Unit

Clean the unit after each use, removing dust, grease, mud, and spilled fluids. Use soft, clean rags to wipe the cabinet exterior and control panel. Low-pressure compressed air [less than 40 PSI (276 kPa)] can also be used to remove dust and debris from the cabinet interior.

This unit contains sensitive electronic components that can be damaged by high pressure and heat. Therefore:

- Do not wash the unit with a high pressure hose or power washer.
- Do not wash the engine block or fuel tank with a power washer or steam cleaner. Water may enter the cabinet and collect in the generator windings or other electrical parts, causing damage.

### Inspecting the Unit

- If the unit is stored outside, check for water inside the cabinet and generator before each use. If wet, dry the unit thoroughly before starting.
- Inspect condition of electrical cords. **DO NOT** use the unit if insulation is cut or worn through.
- Verify winch cables are in good condition and centered on each pulley. **DO NOT** use a cable that is kinked or starting to unravel.
- See ***Figure 4-1***. Verify proper mast cable routing.

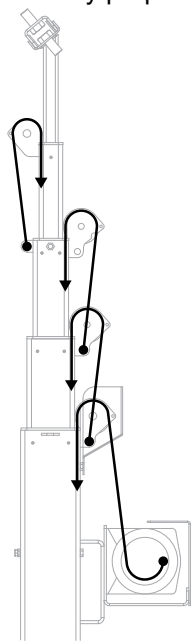


***Figure 4-1. Proper Mast Cable Routing***

- Verify safety pins for the mast lock rod and mast lock bar are present and secured with a chain. Verify the mast lock bar spring is not broken or missing. Check the operation of the mast lock bar.
- Verify the wheel lugs are present and properly tightened. Refer to ***Towing Safety***.
- Check coolant level daily. Normal operating level is between the 'full' and 'add' markings on the overflow jug. Refer to the engine operator's manual for coolant recommendations and proper mixture.
- **AFTER ENGINE IS STOPPED AND COMPLETELY COOL**, coolant may be added directly to the coolant overflow jug.
- Check oil level daily. Refer to the engine operator's manual for the appropriate oil specification. Verify the oil is correct for special operating conditions such as a change in season or climate.
- **DO NOT** start the unit if the engine oil level is below the add mark on the dipstick.
- Normal operating level is in the cross-hatch pattern between the full and add markings on the dipstick.
- Add oil only if the oil level is below the add mark on the bottom of the cross-hatch pattern on the dipstick. **DO NOT OVERFILL** the crankcase.
- Check the fuel level.
- If the unit is connected to a remote start, verify the remote switch is off and tagged.

**NOTE:** If the engine was run out of fuel or the fuel tank was drained, it may be necessary to bleed the fuel lines.

# Basic Maintenance Schedule

Refer to the original equipment manufacturer's operating manual for a complete list of maintenance requirements. Failure to comply with the procedures as described in the engine operator's manual will nullify the warranty, decrease performance and cause equipment damage or premature failure. Maintenance records may be required to complete a warranty request. Use the schedule in the following table as a guide for regular maintenance intervals. For additional or replacement copies of the engine operator's manual, contact a GMASD.

## Basic Maintenance Guide (Mitsubishi Engine)

| Item | Daily | 50 Hr | 250 Hr | 400 Hr | 500 Hr | 750 Hr | 1,000 Hr |
|---|---|---|---|---|---|---|---|
| Check oil level | ♦ | | | | | | |
| Check coolant level | ♦ | | | | | | |
| Check fuel level | ♦ | | | | | | |
| Check tire pressure | ♦ | | | | | | |
| Check all electrical connections | ♦ | | | | | | |
| Inspect radiator fins for debris, clean as required | ♦ | | | | | | |
| Inspect light tower winch for proper operation | ♦ | | | | | | |
| Drain water from fuel tank | | ♦ | | | | | |
| Check air cleaner | | ♦ | | | | | |
| Belt and belt tension: Inspect and adjust | | | ♦ | | | | |
| Replace fuel filter | | | | ♦ | | | |
| Drain and clean fuel tank | | | | | ♦** | | |
| Check glow plugs | | | | | ♦ | | |
| Lubricate leveling jacks | | | | | ♦ | | |
| Replace engine oil and oil filter | | | | | | | ♦* |
| Tighten bolts and nuts on the engine | | | | | | | ♦* |
| Replace heated fuel filter (if equipped) | | | | | | | ♦ |
| Inspect engine starting battery | | | | | | | ♦ |

* *Perform after the initial 50 hours of operation, then on the regularly scheduled interval indicated in the schedule above.*

** *Certain conditions may require the fuel tank to be drained and cleaned more often. When operating in extremely dusty conditions, clean the fuel tank as often as necessary.*

### Basic Maintenance Guide (Kubota Engine)

| Item | Daily | 50 Hr | 100 Hr | 200 Hr | 400 Hr | 500 Hr | 1,000 Hr | 1 Yr |
|---|---|---|---|---|---|---|---|---|
| Check oil level | ♦ | | | | | | | |
| Check coolant level | ♦ | | | | | | | |
| Check fuel level | ♦ | | | | | | | |
| Check tire pressure | ♦ | | | | | | | |
| Check all electrical connections | ♦ | | | | | | | |
| Check radiator fins for debris; clean as needed | ♦ | | | | | | | |
| Inspect light tower winch for proper operation | ♦ | | | | | | | |
| Check fuel pipes and clamp bands | | ♦ | | | | | | |
| Clean air cleaner element | | | ♦ | | | | | |
| Clean fuel filter | | | ♦ | | | | | |
| Check fan belt tightness | | | ♦ | | | | | |
| Drain water separator | | | ♦ | | | | | |
| Check radiator hoses and clamp bands | | | | ♦ | | | | |
| Check intake air line | | | | ♦ | | | | |
| Replace fuel filter cartridge | | | | | ♦ | | | |
| Clean water separator | | | | | ♦ | | | |
| Lubricate leveling jacks | | | | | | ♦ | | |
| Remove sediment in fuel tank | | | | | | ♦ | | |
| Replace fan belt | | | | | | ♦ | | |
| Replace engine oil and oil filter | | | | | | | ♦* | |
| Replace air filter element | | | | | | | | ♦** |

* *Change the engine oil and oil filter after the initial 50 hours of operation, then at the appropriate interval thereafter.*

** *Replace the air cleaner element yearly, or after six cleanings, whichever occurs first.*

## Winch Use, Operation, and Maintenance

- Check winch. Ensure it is free of dirt, oil, grease, water, and other foreign substances.
- Check all mounting bolts. Ensure all are tightened to recommended torque values. Replace any damaged fasteners.
- Periodically check connections. Ensure all are securely tightened tight and free of corrosion.
- Every time winch is operated, check cable. Look for visible damage. Examples of damage are: cuts, knots, crushed or frayed portions, and broken strands. Replace cable immediately if damaged. Failure to replace a damaged cable could result in breakage.
- Regularly check brake. Look for slippage or drift. This is detected visually when winch is under load. If winch drum continues to turn after controls are released, the brake may need to be replaced.
- Periodically clean and grease the brake assembly. This ensures proper performance and maximizes winch life expectancy. If winch seems to labor, or if it gets excessively hot when lowering loads, the brake requires service or replacement.
- Periodically check motor brushes. Replace as necessary.

**NOTE:** Only the motor brushes and brake assembly require periodic replacement.

### Winch Mechanical Brake

The mechanical brake generates heat when loads are lowered and the wire cable is powered out. Avoid overheating the mechanical brake.

Whine or chatter associated with a new mechanical brake is normal and typically disappears with use.

Overheating the mechanical brake may result in permanent damage to, or failure of, the brake. Replace any damaged brake components before resuming use of the winch.

### Winch Preventive Maintenance Schedule

| Activity | After First Use | Before Each Use | Semi-Annually |
|---|---|---|---|
| Check fasteners | ♦ | | ♦ |
| Check electrical Connections | ♦ | | ♦ |
| Clean and grease brake assembly | | | ♦ |
| Check motor brushes | | | ♦ |
| Visually check winch and control | ♦ | ♦ | ♦ |

## Lower Radiator Hose Heater (If Equipped)—Use and Maintenance

The following points should be followed when operating a unit equipped with a lower radiator hose heater.

**IMPORTANT NOTE:** Improper use of the lower radiator hose heater could result in serious personal injury.

- Verify that cooling system is full of a proper mixture of water and engine coolant before each heater use.
- Heater is designed for all-night operation; however, 2-5 hours of heating just prior to starting is usually sufficient for proper engine starting.
- When heater is in operation, unit must be parked in a level position to maintain the proper orientation of the heater.
- Use only an undamaged extension cord, outdoors rated, three-prong grounded 120VAC cord with a minimum amperage rating of 10A. Connect to properly grounded 120VAC, GFCI outlet only.
- Before starting the engine, unplug extension cord from power first; then unplug heater cordset from extension cord.

## Trailer Wheel Bearings

The light tower is equipped with a grease zerk fitting to allow lubrication of the wheel bearings without the need to disassemble the axle hub. To lubricate the axle bearings, remove the small rubber plug on the grease cap, attach a standard grease gun fitting to the grease zerk fitting and pump grease into the fitting until new grease is visible around the nozzle of the grease gun. Use only a high quality grease made specifically for lubrication of wheel bearings. Wipe any excess grease from the hub with a clean cloth and replace the rubber plug when finished. The minimum recommended lubrication is every 12 months or 12,000 miles (19,312 km); more frequent lubrication may be required under extremely dusty or damp operating conditions.

## Jack Maintenance

The following procedures should be performed at least annually: For side-wind models, the internal gearing and bushings of the jack must be kept lubricated.

- Apply a small amount of automotive grease (A) to the internal gearing by removing the jack cover, or if equipped, use a needle nose applicator or standard grease gun on the lubrication point found on the side of the jack near the crank. Rotate the jack handle to distribute the grease evenly.
- A lightweight oil (B) must be applied to the handle unit at both sides of the tube for side-wind models.
- If equipped, the axle bolt and nut assembly of the caster wheel must also be lubricated with the same lightweight oil.
- For top-wind models, apply a lightweight oil to the screw stem.

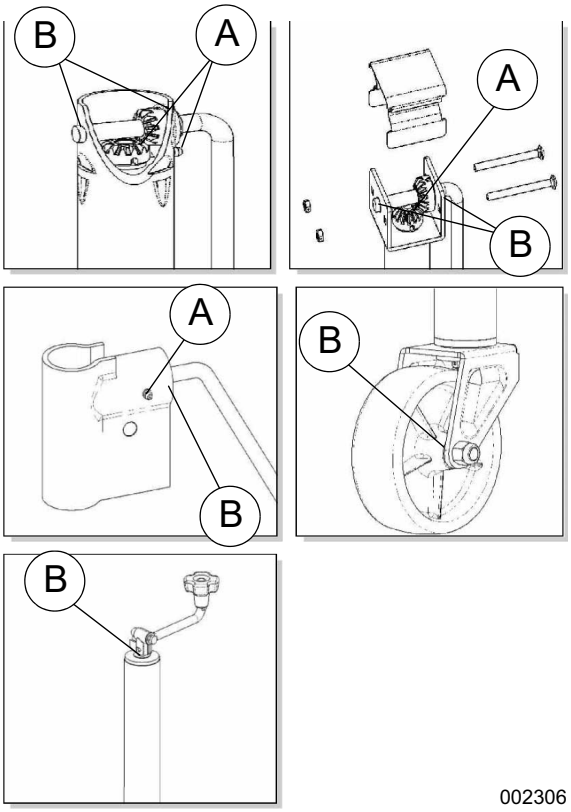


*Figure 4-2. Jack Maintenance*

## General Troubleshooting

Some of the more common problems are listed in the table below. This information is intended to be a check or verification that simple causes can be located and fixed. It does not cover all types of problems. Refer to the OEM engine operator's manual for additional troubleshooting information. Procedures that require in-depth knowledge or skills should be referred to a GMASD.

**WARNING**

Risk of burns. Allow engine to cool before draining oil or coolant. Failure to do so could result in death or serious injury.

(000139)

| Problem | Possible Cause | Solution |
|---|---|---|
| Low oil pressure shutdown | Low oil level | Verify oil level on dipstick. Add oil, if needed. |
| | Oil leaking from engine | Visually inspect the engine for leaks. |
| | Oil pressure switch failure | Refer to OEM engine operator's manual to identify corrective action. |
| High coolant temperature shutdown | Low coolant level | Add coolant if needed. Allow engine to cool, then check coolant level in radiator. Restart engine and check coolant temperature. Stop engine immediately if coolant temperature is 210°F (99°C) or more. |
| | Blockage in radiator | Inspect radiator shroud and ducting for blockage and remove any foreign matter. |
| | Leakage in coolant hoses, engine block, or water pump | Inspect for visible leaks. Verify tension of water pump serpentine drive belt. |
| | | Remove load on generator and restart engine. Verify coolant temperature and shut engine down immediately if it starts to overheat. Refer to the OEM engine operator's manual for additional information on engine overheating. |
| Unit cranks but does not start | Fuel level low | Check fuel level in tank. |
| | | Verify fuel pump operation. |
| | Restricted air filter | Inspect air filter for blockage. |
| | | Refer to OEM engine operator's manual for additional information. |

If problems persist, contact a GMASD or contact Generac Mobile at 1-800-926-9768.

# Troubleshooting the Lights

**IMPORTANT NOTE:** Only a qualified electrician should troubleshoot or repair electrical problems occurring in this equipment. Contact Generac Mobile Technical Service at 1-800-926-9768 for assistance if you have any questions, or if problems persist.

**⚠WARNING**

Burn hazard. Lamps become extremely hot while in use. Allow 10–15 minutes for cooling before handling or lowering mast. Touching a hot lens or fixture can cause severe burns.

(000278)

**⚠WARNING**

Electrocution. Potentially lethal voltages are generated by this equipment. Render the equipment safe before attempting repairs or maintenance. Failure to do so could result in death or serious injury.

(000187)

## Troubleshooting Lights—MH Units

**NOTE:** The table below only applies to MH light fixtures. For LED lights troubleshooting, see ***Troubleshooting Lights—LED Units***.

| Problem | Possible Cause | Solution |
|---|---|---|
| Mast Lights OFF but ballast indicators on control panel ON | Light fixture too hot | Allow light fixture to cool 10-15 minutes before restarting. |
| | Bulb connection faulty | Ensure bulb is securely installed to socket. |
| | Bulb broken | Check for:<br>• Broken arc tube or outer lamp jacket<br>• Broken or loose components in lamp envelope<br>• Blackening/deposits inside tube. |
| | Lighting connections loose | Check wire connections:<br>• Inside mast junction box<br>• Bulb housings and sockets |
| | Electrical cord damaged or loose | Check:<br>• Mast electrical cord for damage<br>• Cord connections inside control box |
| Mast Lights OFF and ballast indicators on control panel OFF | Lighting connections loose | Check wire connections:<br>• Inside control box<br>• Inside each ballast box |
| | Generator output incorrect | Check voltage to ballasts by checking voltage to the GFCI outlet. Correct incoming voltage is 120 V, ±5 V. If voltage is incorrect, engine speed may need to be adjusted, or generator may require service.<br>**IMPORTANT NOTE:** Before adjusting engine speed, change fuel filter. |
| | Transformer output low | Verify voltage from transformer: When a bulb “strikes” (induces an arc), transformer voltage should be approximately 400 VAC. Next, voltage should drop, slowly rise, then stabilize at 240–260 VAC.<br>On hard-wired models, remove mast junction box cover and insert wire probes into the connector blocks of the light and ground.<br>If correct voltage is not achieved, check the capacitor to determine if capacitor or coil must be replaced. |

| Problem | Possible Cause | Solution |
|---|---|---|
| Mast Lights ON but light output low | Fixture and/or lens is dirty | Clean components:<br>• Reflective surface of light fixture<br>• Inside and outside surface of glass lens<br>**IMPORTANT NOTE:** Clean components only with mild soap and water. Other chemicals may damage surfaces and glass. |
| | Bulb worn, due to normal use | Replace bulb. |
| | Electrical connections damaged or loose | Check:<br>• Mast coil cord<br>• Mast junction box<br>• Mast light connections |
| | Generator output incorrect | Check voltage to ballasts by checking voltage to the GFCI outlet. Correct incoming voltage is 120 V, ±5 V. If voltage is incorrect, engine speed may need to be adjusted, or generator may require service.<br>**IMPORTANT NOTE:** Before adjusting engine speed, change fuel filter. |
| | Low transformer output | Verify voltage from transformer: When a bulb *strikes* (induces an arc), transformer voltage should be approximately 400 VAC. Next, voltage should drop, slowly rise, then stabilize at 240–260 VAC.<br>On hard-wired models, remove mast junction box cover and insert wire probes into the connector blocks of the light and ground.<br>If correct voltage is not achieved, check the capacitor to determine if capacitor or coil must be replaced. |

## Troubleshooting Lights—LED Units

**NOTE:** The table below only applies to LED light fixtures. For MH lights troubleshooting, see ***Troubleshooting Lights—MH Units***.

| Problem | Possible Cause | Solution |
|---|---|---|
| Mast lights off, checking outside control box | Light fixture too hot | Allow light fixture to cool 10–15 minutes before restarting. |
| | Lighting connections Loose | Check wire connections:<br>• Inside mast junction box<br>• LED housings and sockets |
| | Electrical cord damaged or loose | Check:<br>• Mast electrical cord for damage<br>• Cord connections inside control box |
| | Fuel filter faulty | With engine running and lights off, measure voltage and frequency at the GFCI receptacle. Voltage should indicate 120VAC ± 5%, and frequency should indicate 60.7 Hz ± 5%. If frequency and voltage are both low (<114VAC, <58 Hz), replace the fuel filter. |
| | Generator capacitor faulty | Measure the capacitance of the generator capacitor. If measurement is outside rating (as indicated on the capacitor), replace the capacitor. |
| Mast lights off, checking inside control box | Lighting connections loose | Check connections inside control box. |
| | Generator output incorrect | Check voltage to ballast drivers by checking voltage to the GFCI receptacle. Correct incoming voltage is 120 V, ±5 V. If voltage is incorrect, the generator may require service.<br>**IMPORTANT NOTE:** Before adjusting engine speed, change fuel filter. |

**This page intentionally left blank.**

## Mast Junction Box and Light Connections—MH Units

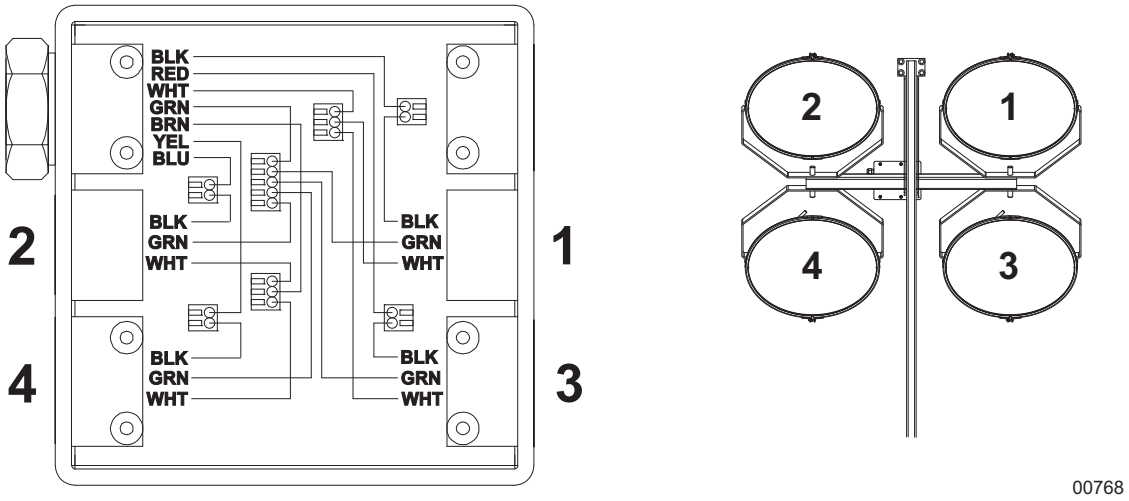


## Mast Junction Box and Light Connections—LED Units

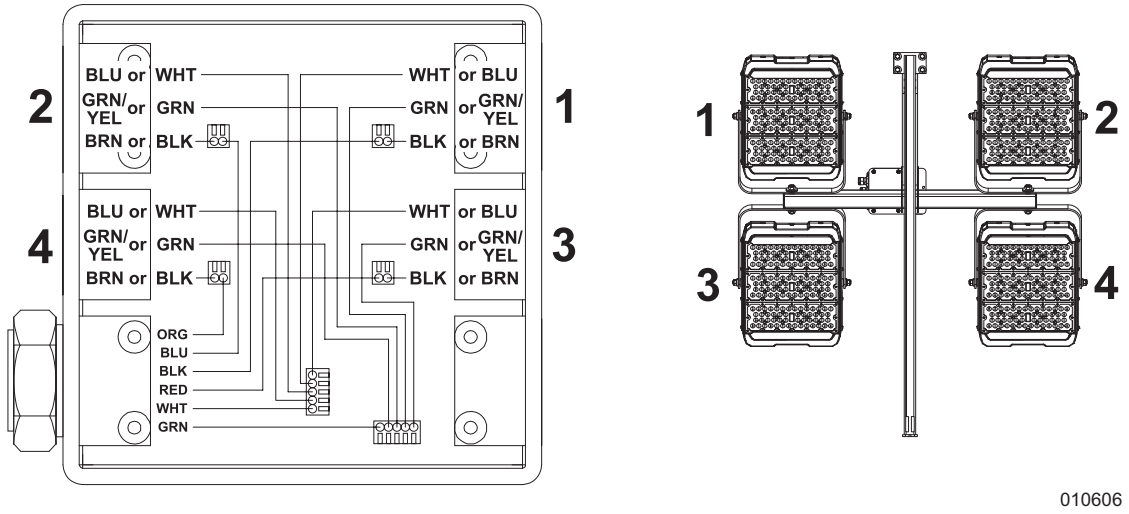

# MLT4060 and MLT4080—MH Units—Analog Controls

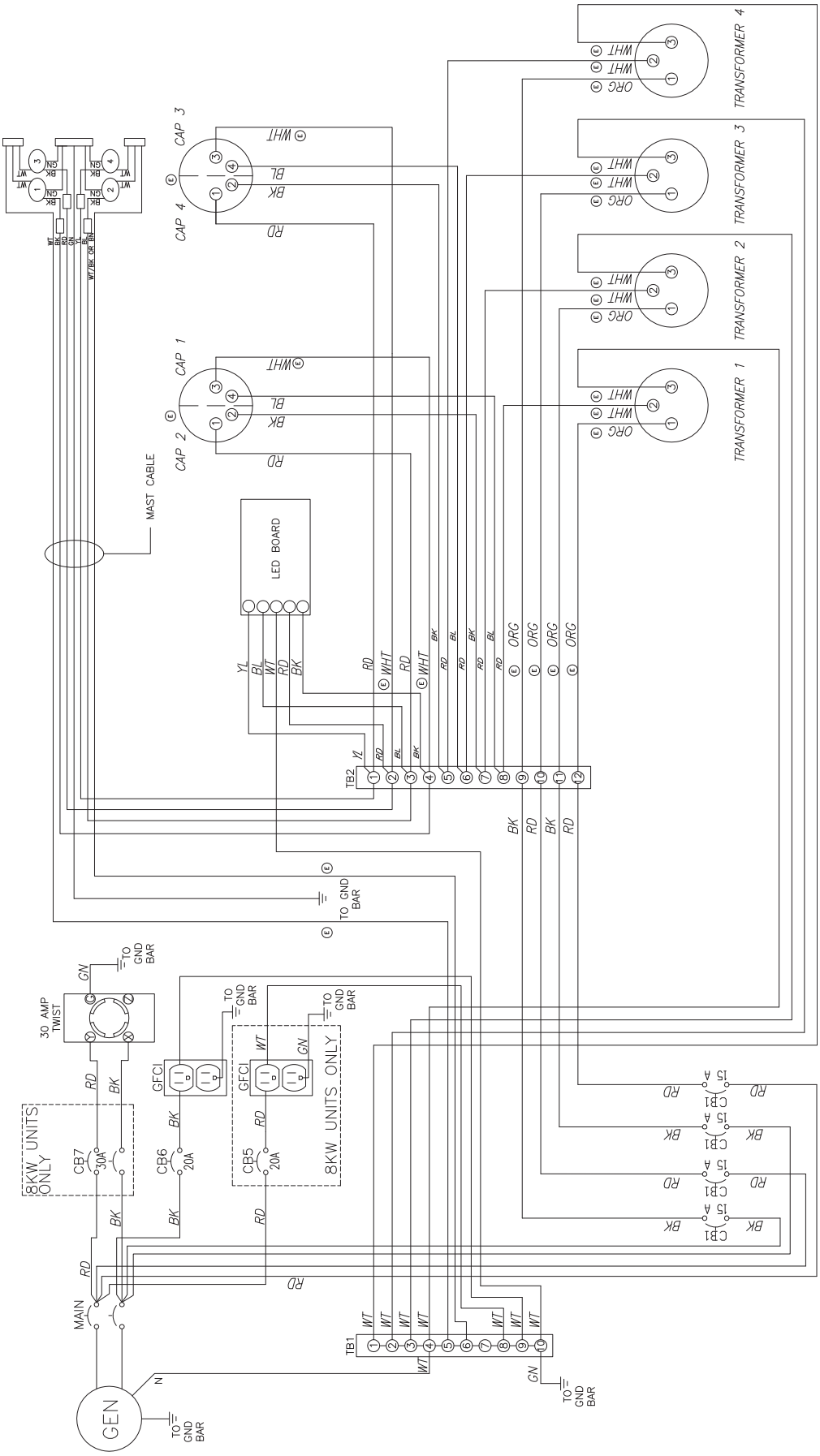


90347_E_02.21.19

# MLT4060—LED Units—Analog Controls

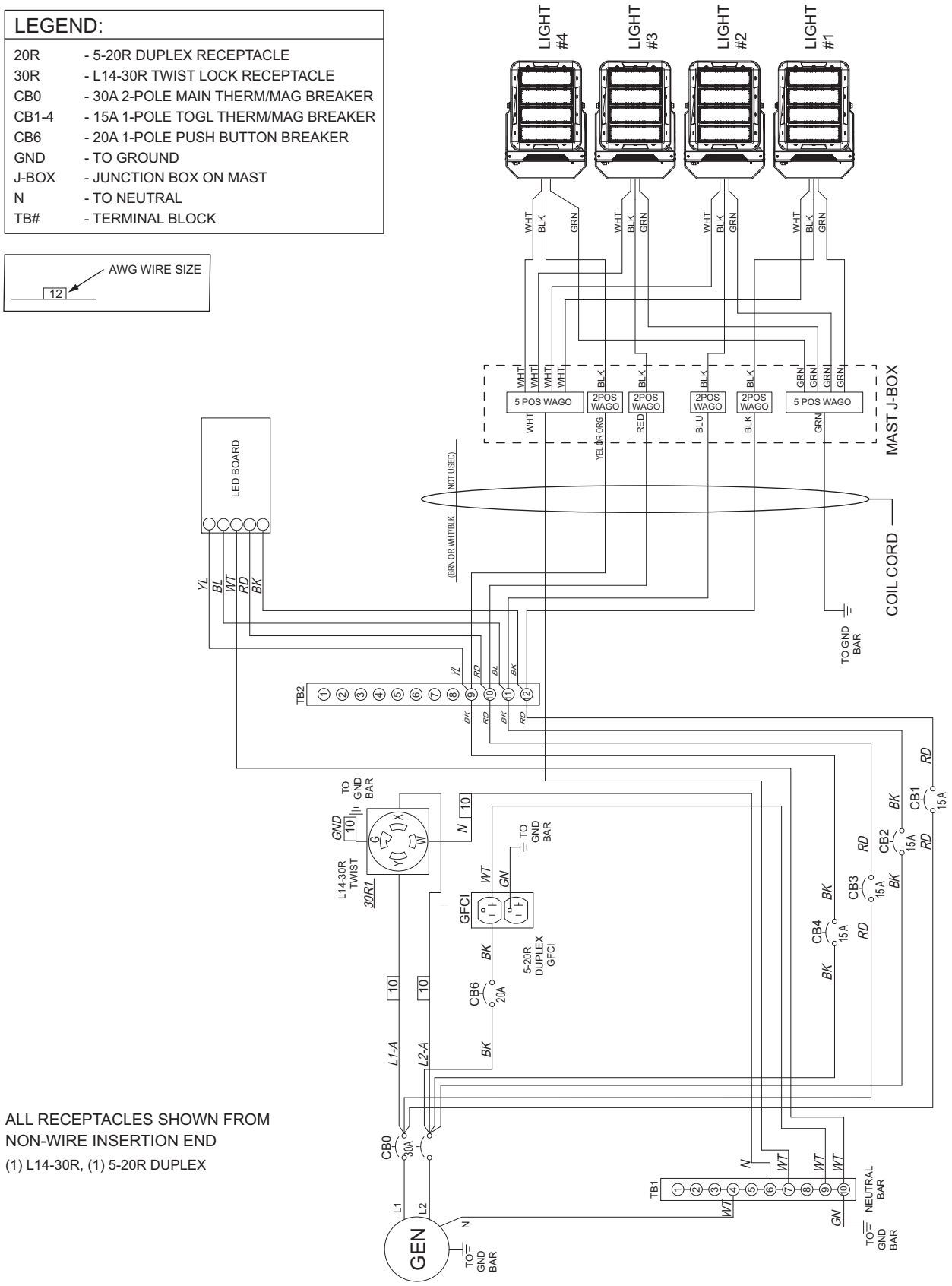

# MLT4060—LED Units—Power Zone Controls (If Equipped)

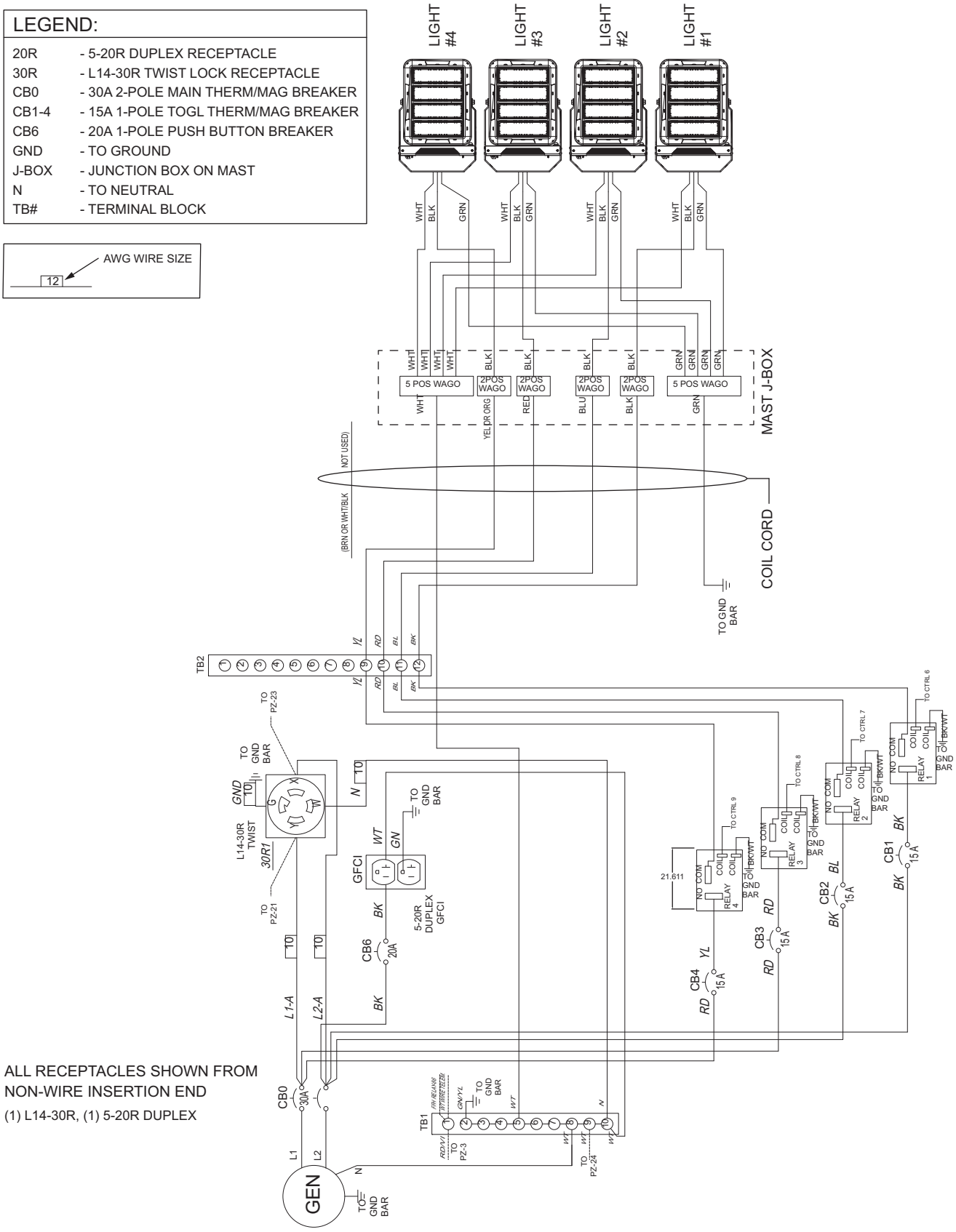

# MLT4080—LED Units—Analog Controls

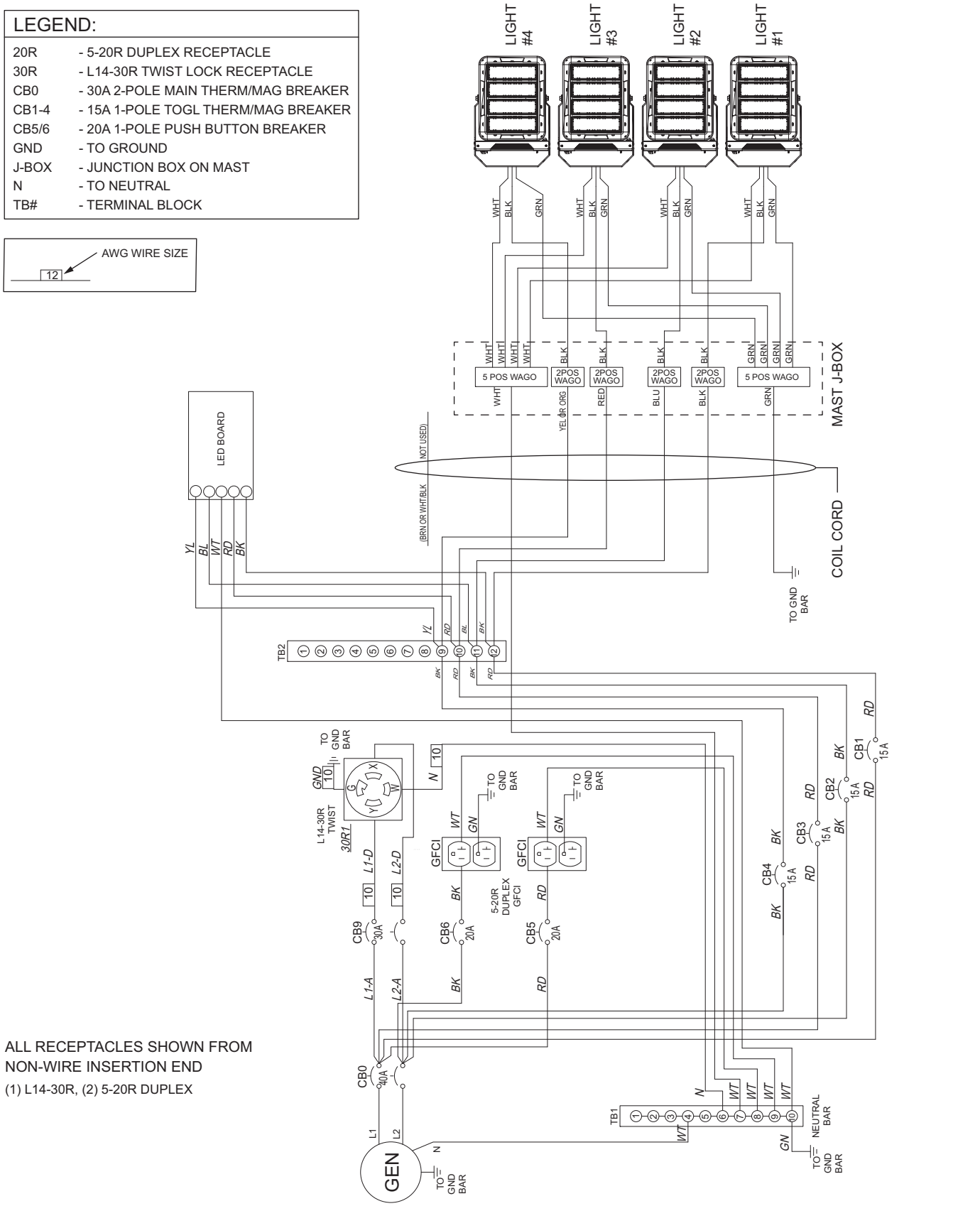

# MLT4080—LED Units—Power Zone Controls (If Equipped)

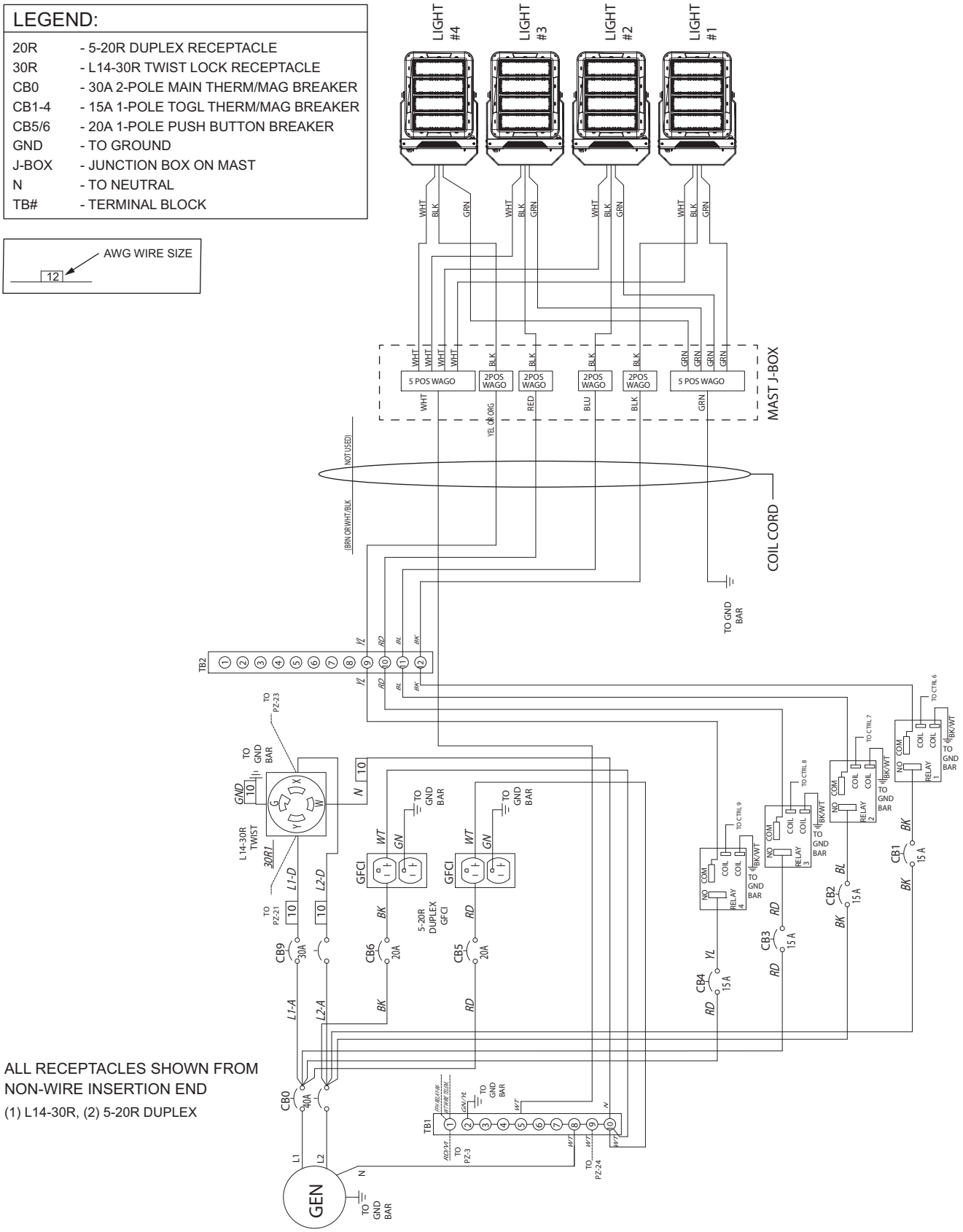


A0001382433SH2_A_02.03.21

# AC Wiring—MLT4150—MH Units—Analog Controls

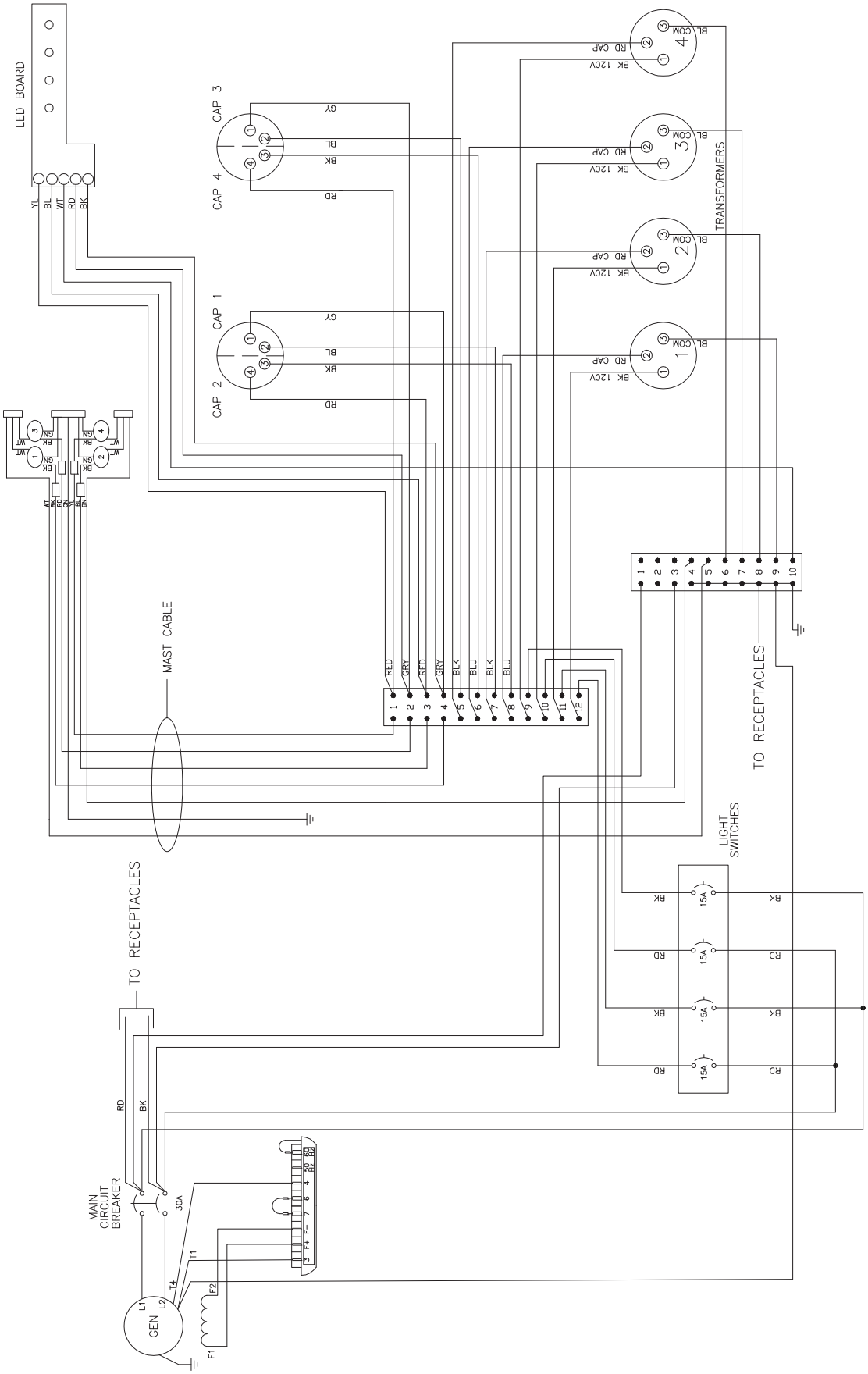


90454_E_10.26.18

# AC Wiring—Receptacle Panel

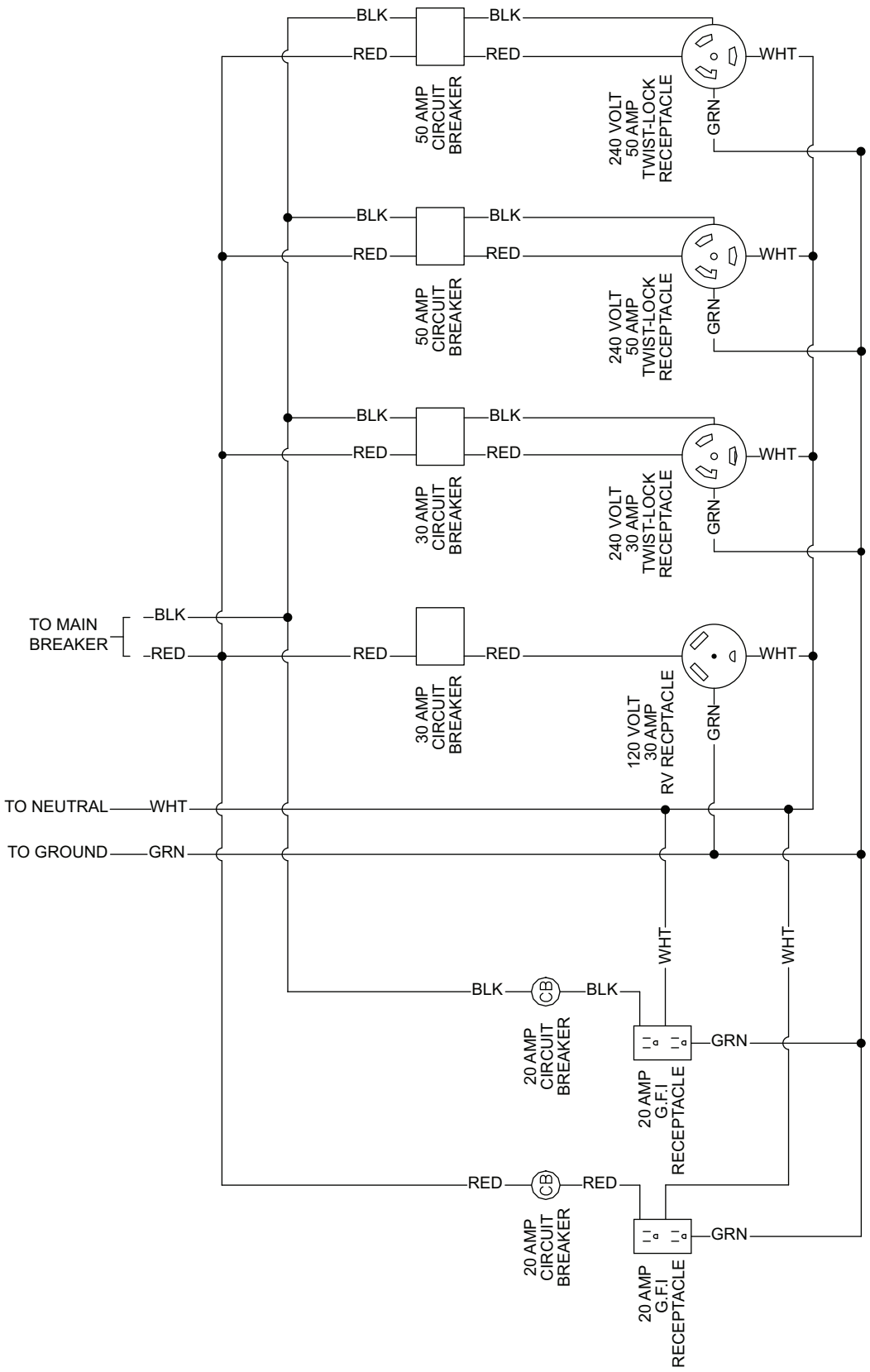


(2x5-20R, 1xTT-30, 1xL14-30R, 2x14-50) 90317_ORG_07.06.11

# AC Wiring—Receptacle Panel Options (If Equipped) (1 of 2)

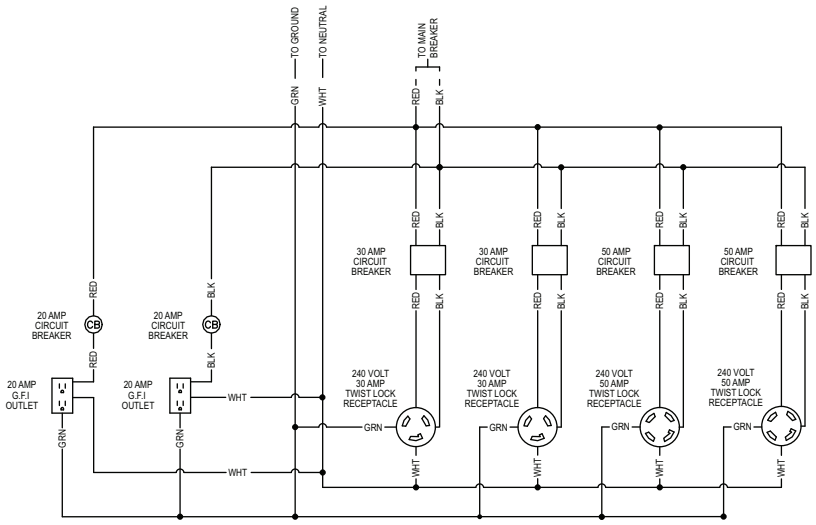


Receptacle Panel (2x5-20R, 2xL6-30R, 2xL14-50) 90315_ORG_10.14.11

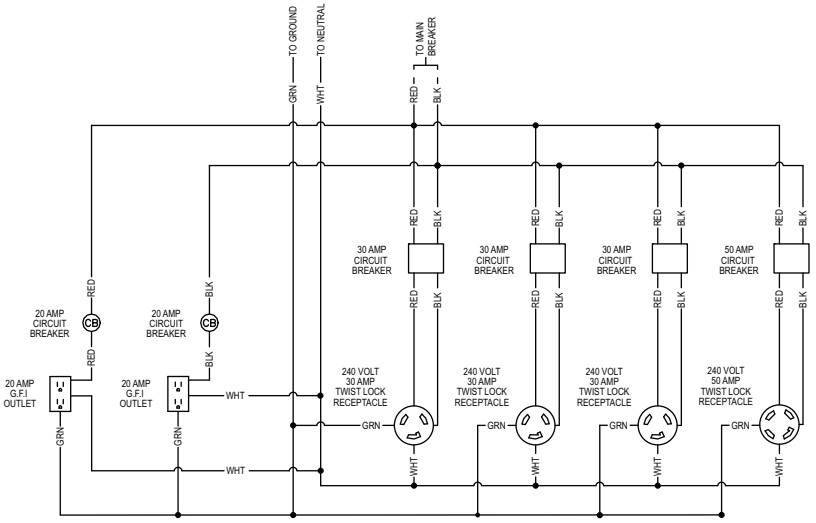


Receptacle Panel (2x5-20R, 3xL6-30R, 1xL14-50) 90318_ORG_07.06.11

# AC Wiring—Receptacle Panel Options (If Equipped) (2 of 2)

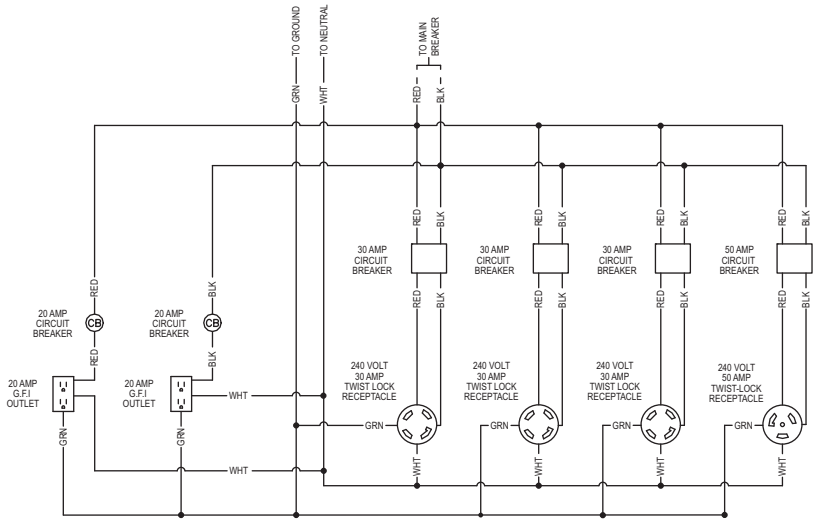


Receptacle Panel (2x5-20R, 3xL14-30R, 1x50A) 90320_ORG_07.06.11

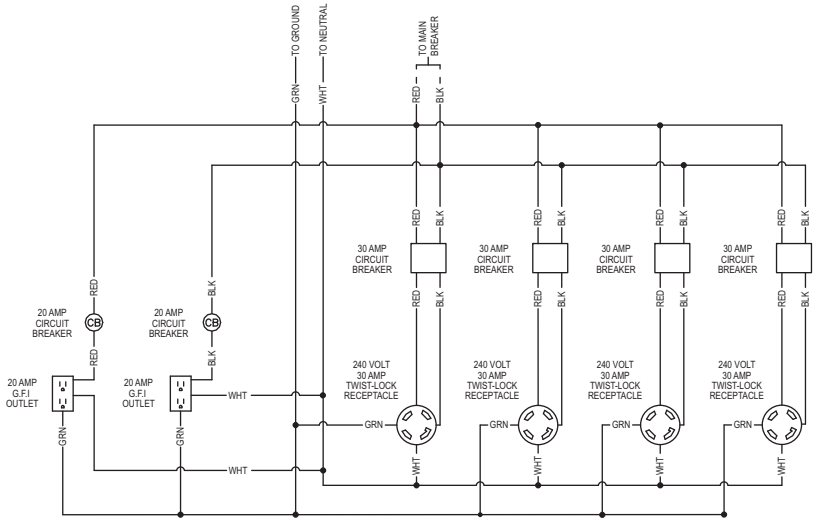


Receptacle Panel (2x5-20R, 4xL14-30R) 90321_ORG_07.06.11

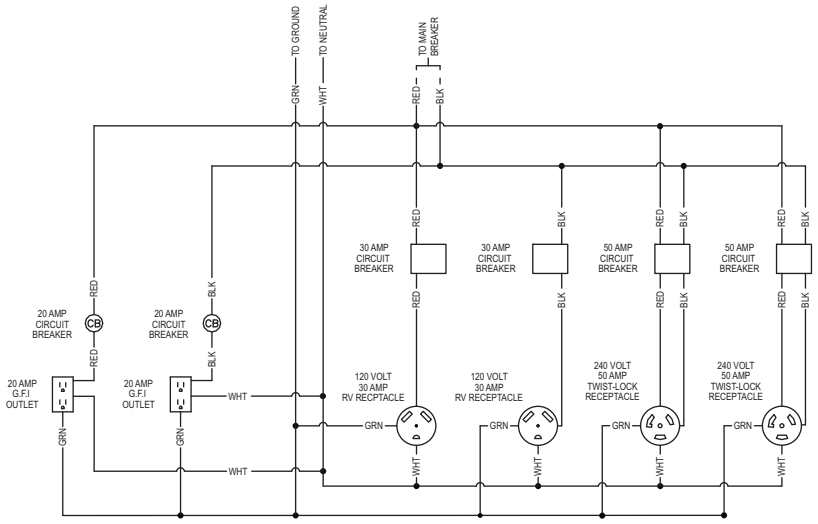


Receptacle Panel (2x5-20R, 2xTT-30, 2x14-50) 90355_ORG_07.06.11

# MLT4150—LED Units—Analog Controls

## Receptacle Configuration: Two L14-30R, Two 6369 Style B (50 A), and Two 5-20R Duplex

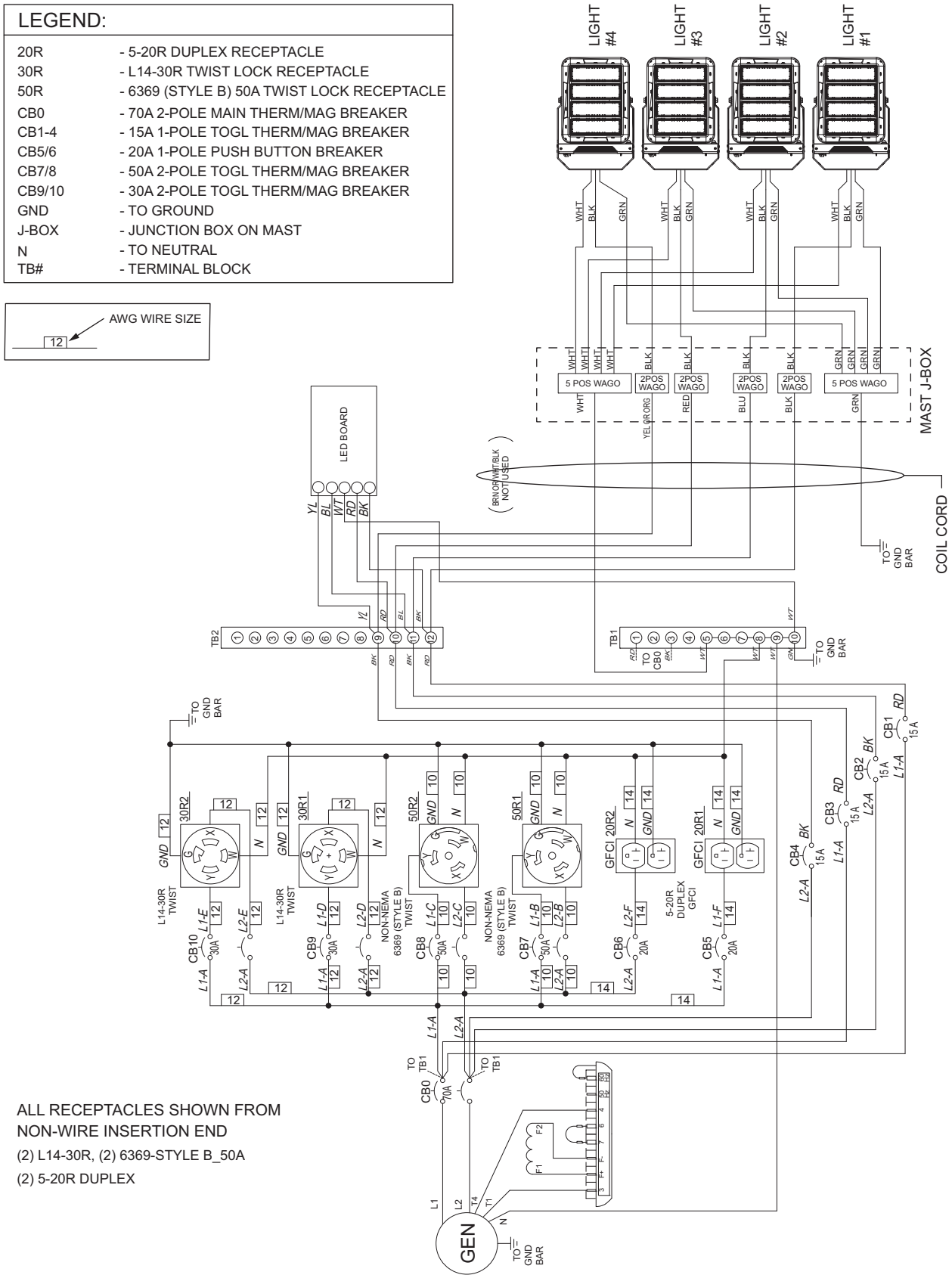

## Receptacle Configuration: One TT-30R, One L6-30R, Two 6369 Style B (50 A), and Two 5-20R Duplex

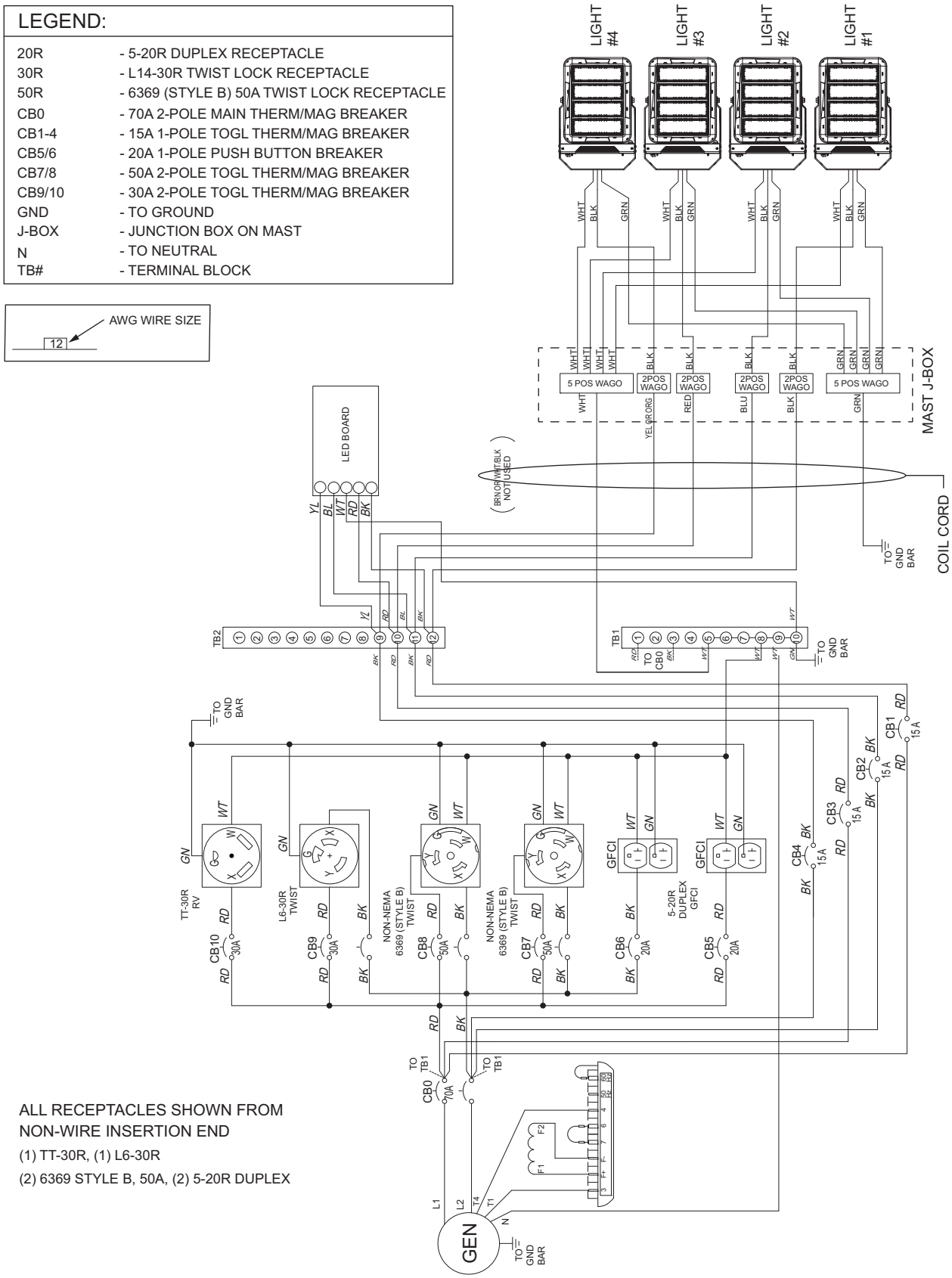

## Receptacle Configuration: Three L6-20R, One 6369 Style B (50 A), and Two 5-20R Duplex

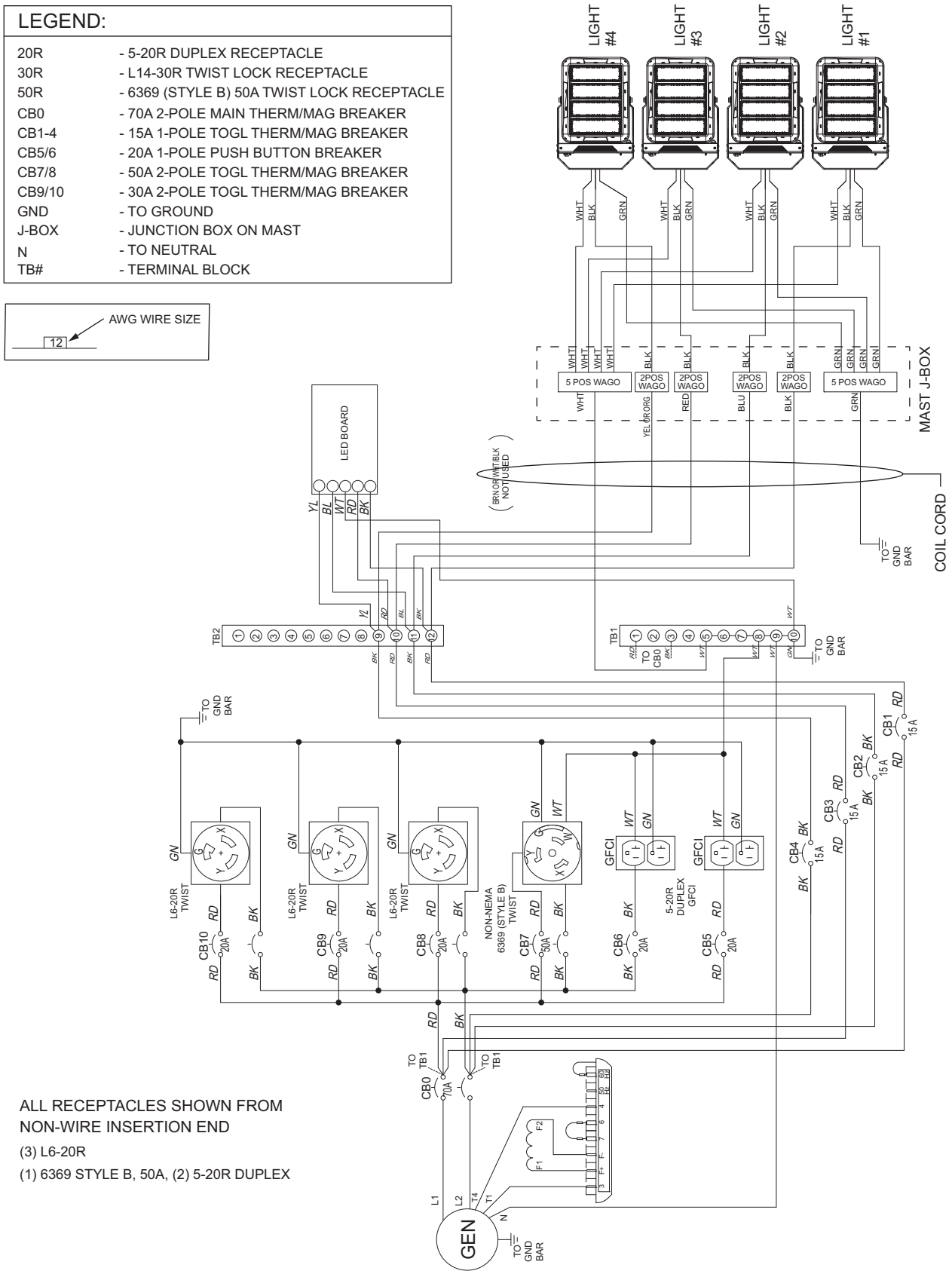

## Receptacle Configuration: Three L14-30R, One 6369 Style B (50 A), and Two 5-20R Duplex

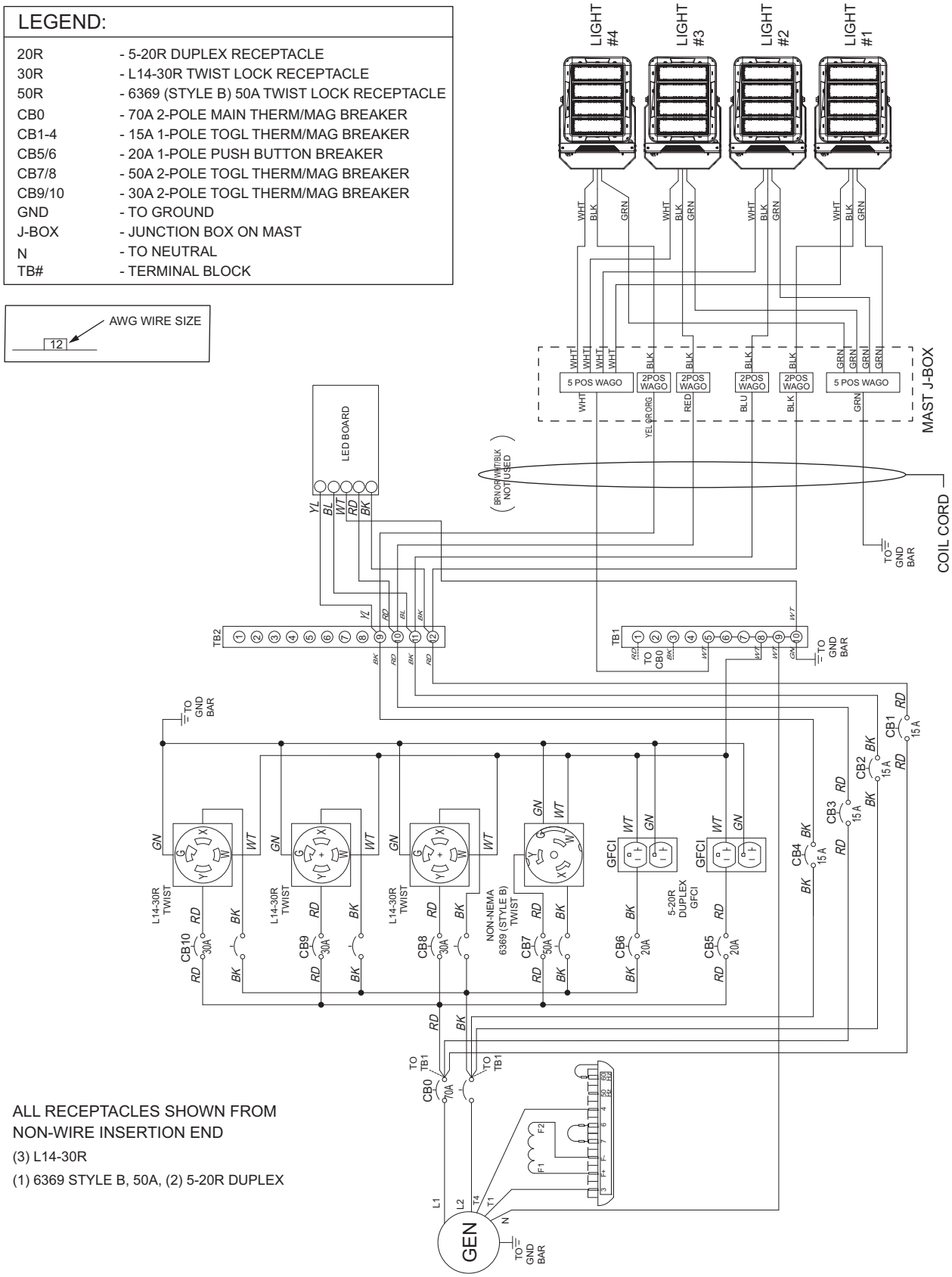

## Receptacle Configuration: Four L14-30R and Two 5-20R Duplex

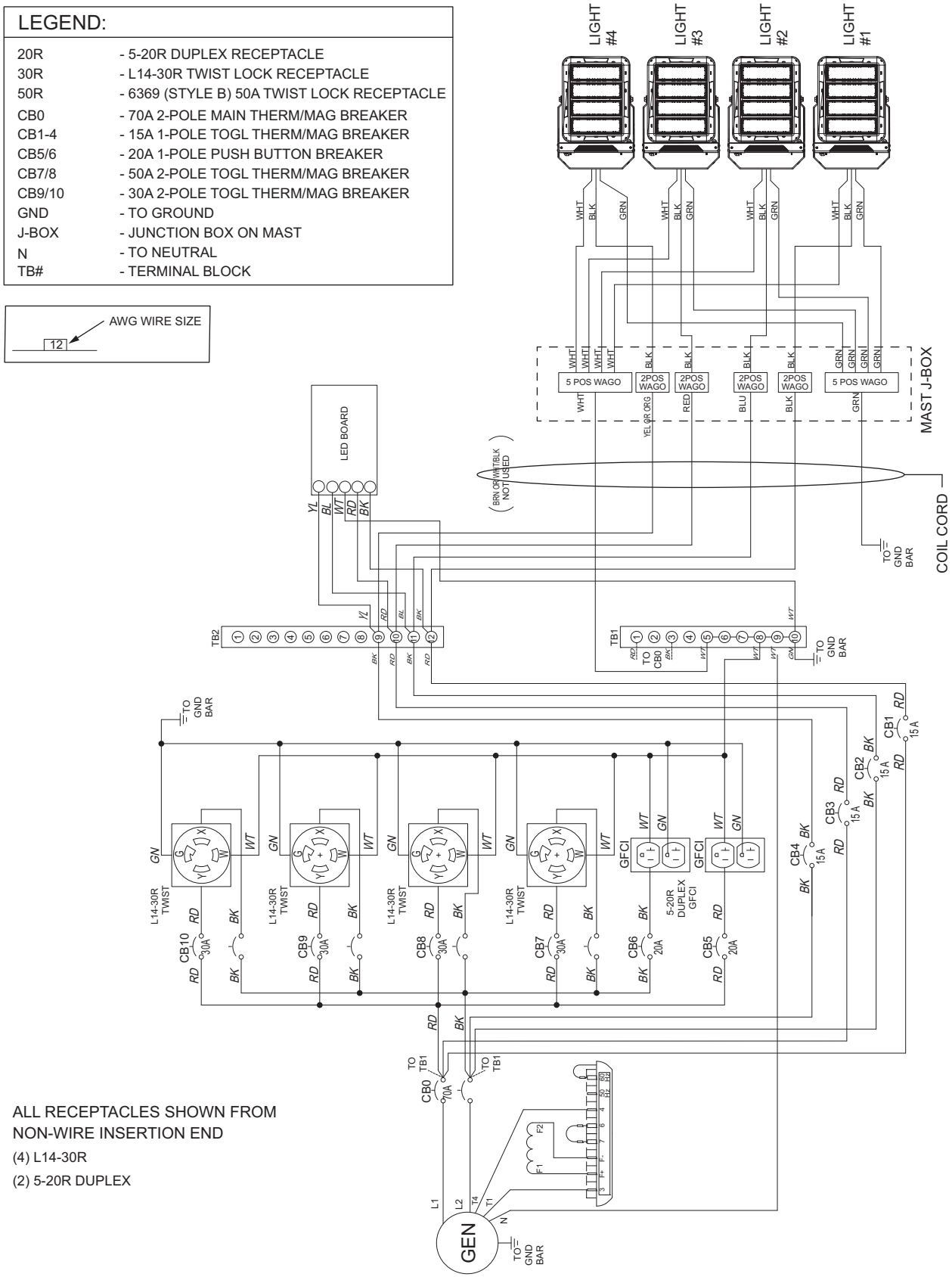

## Receptacle Configuration: Two TT-30R, Two 14-50R, and Two 5-20R Duplex

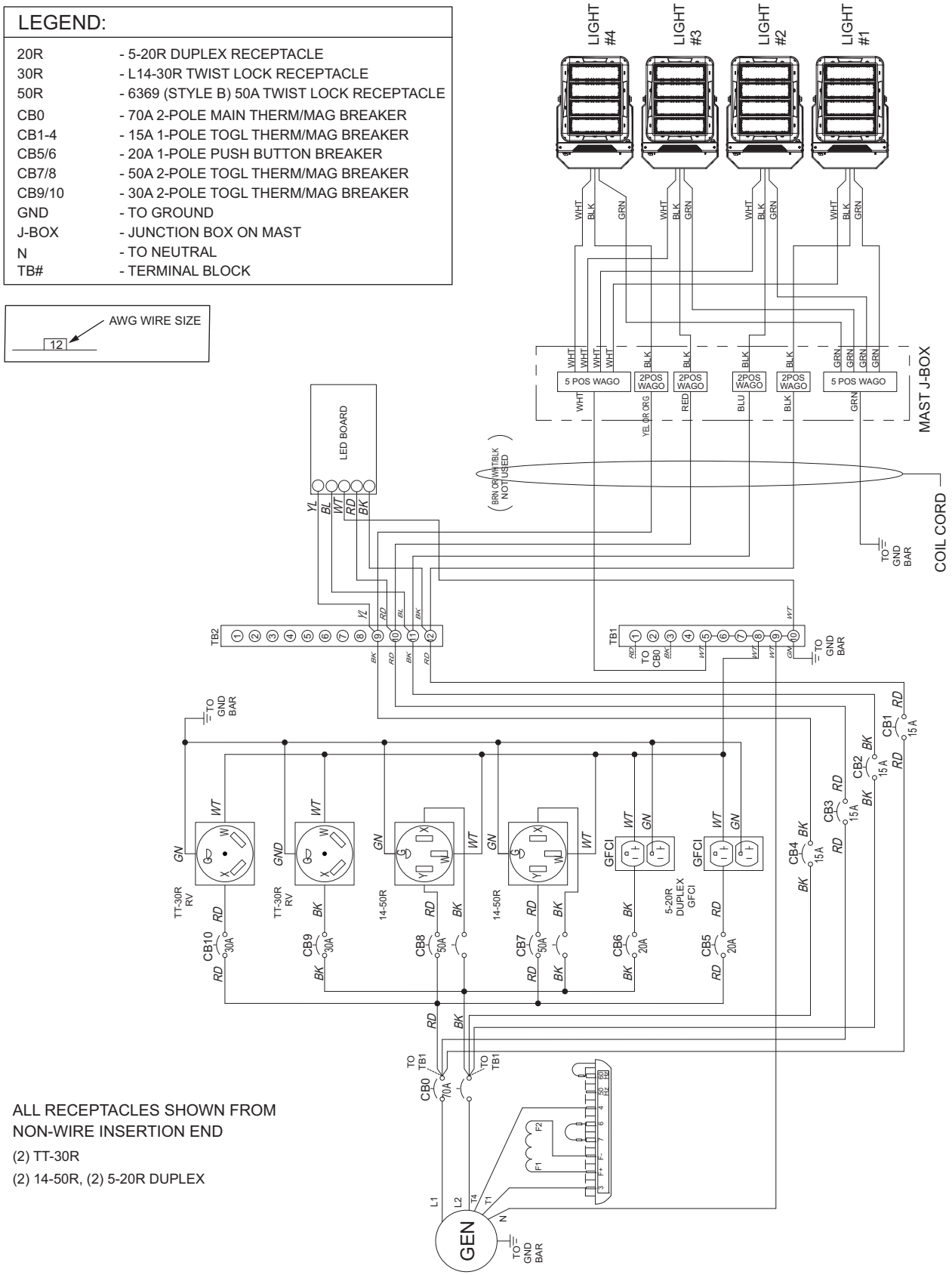

# MLT4150—LED Units—Power Zone Controls (If Equipped)

## Receptacle Configuration: Two L14-30R, Two 6369 Style B (50 A), and Two 5-20R Duplex

LEGEND:

| | |
|---|---|
| 20R | - 5-20R DUPLEX RECEPTACLE |
| 30R | - L14-30R TWIST LOCK RECEPTACLE |
| 50R | - 6369 (STYLE B) 50A TWIST LOCK RECEPTACLE |
| CB0 | - 70A 2-POLE MAIN THERM/MAG BREAKER |
| CB1-4 | - 15A 1-POLE TOGL THERM/MAG BREAKER |
| CB5/6 | - 20A 1-POLE PUSH BUTTON BREAKER |
| CB7/8 | - 50A 2-POLE TOGL THERM/MAG BREAKER |
| CB9/10 | - 30A 2-POLE TOGL THERM/MAG BREAKER |
| GND | - TO GROUND |
| J-BOX | - JUNCTION BOX ON MAST |
| N | - TO NEUTRAL |
| TB# | - TERMINAL BLOCK |

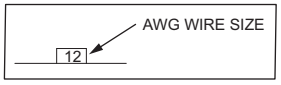


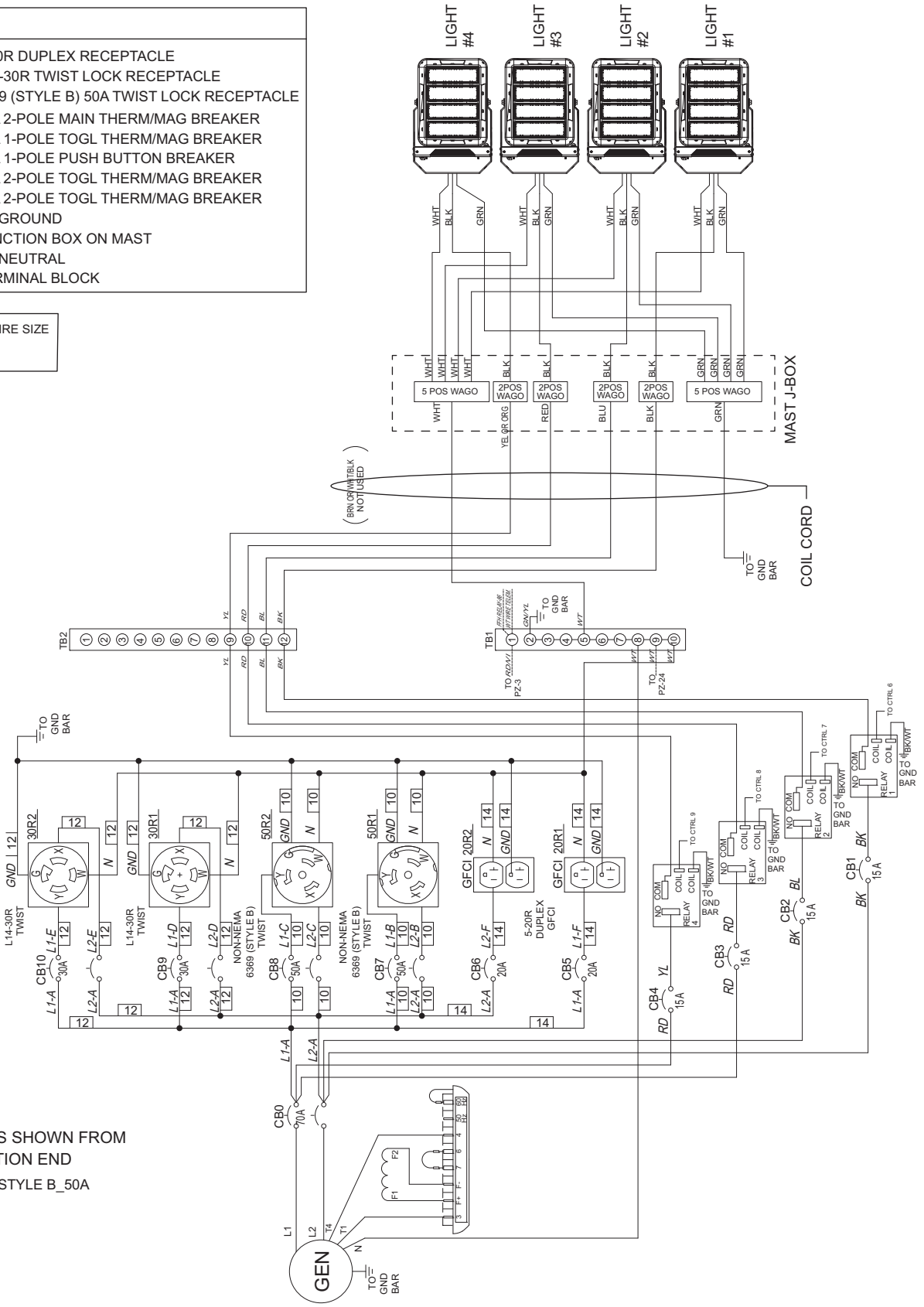


ALL RECEPTACLES SHOWN FROM NON-WIRE INSERTION END

(2) L14-30R, (2) 6369-STYLE B_50A

(2) 5-20R DUPLEX

A0001382434SH7_A_02.03.21

## Receptacle Configuration: One TT-30R, One L6-30R, Two 6369 Style B (50 A), and Two 5-20R Duplex

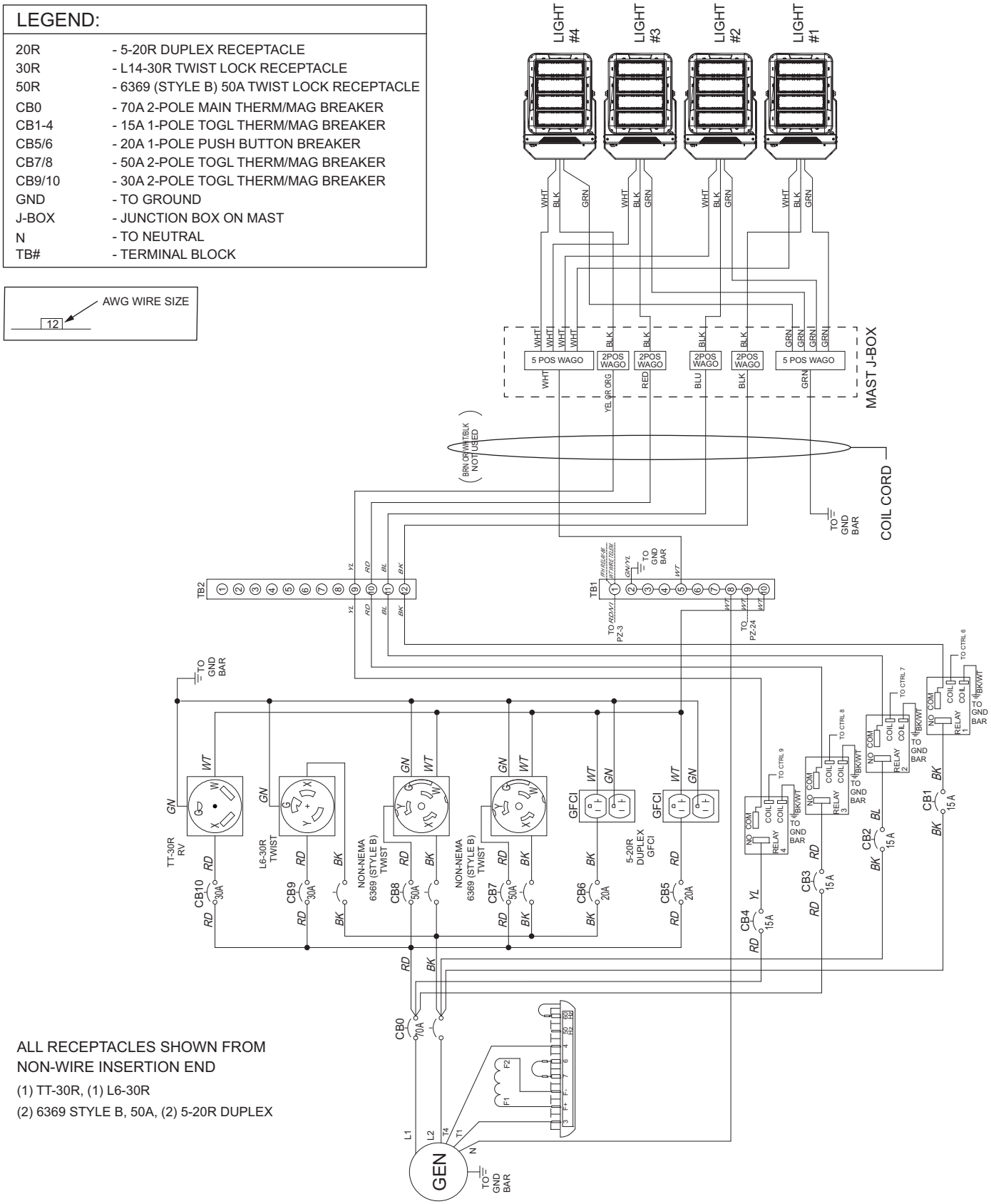

## Receptacle Configuration: Three L6-20R, One 6369 Style B (50 A), and Two 5-20R Duplex

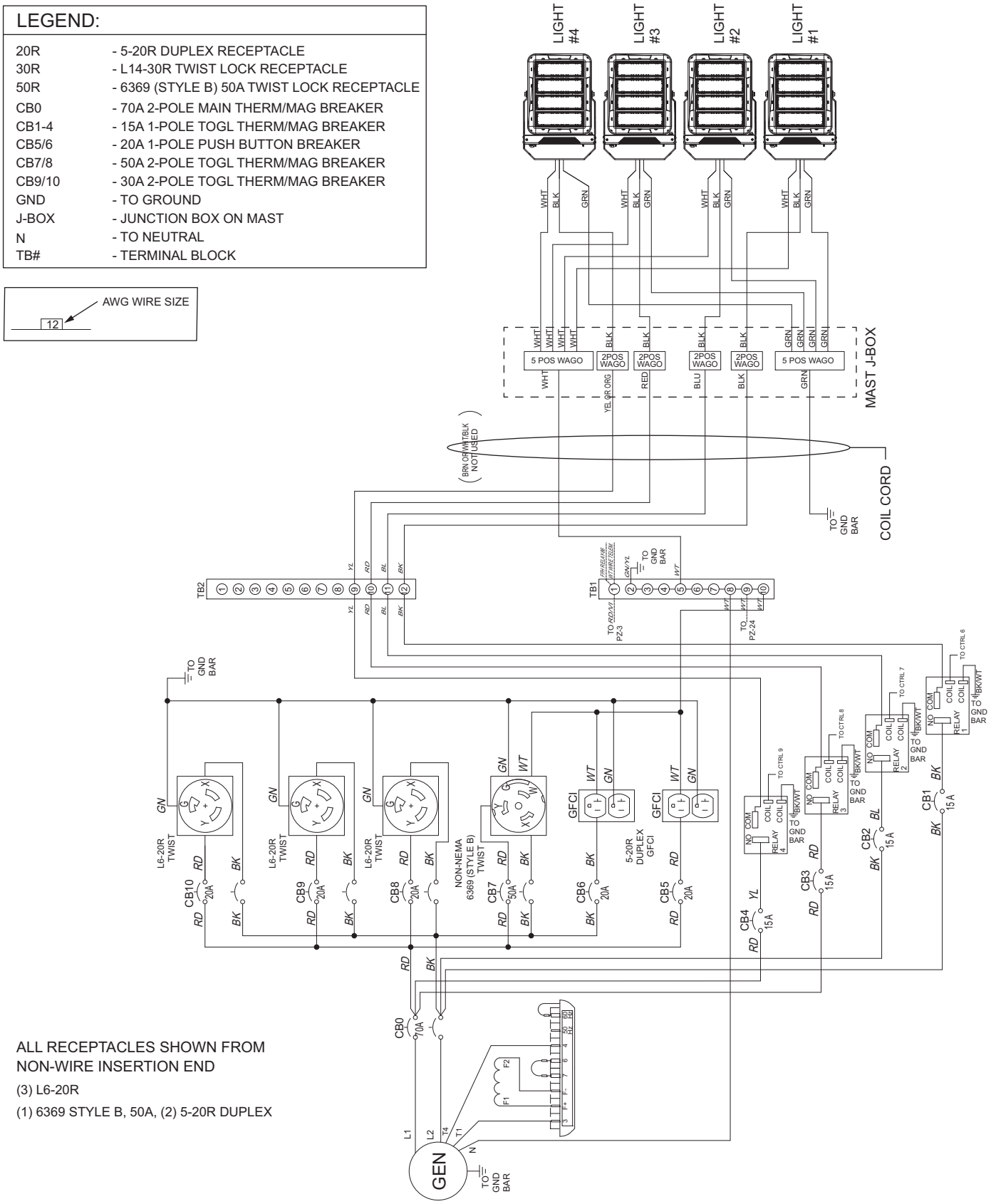

## Receptacle Configuration: Three L14-30R, One 6369 Style B (50 A), and Two 5-20R Duplex

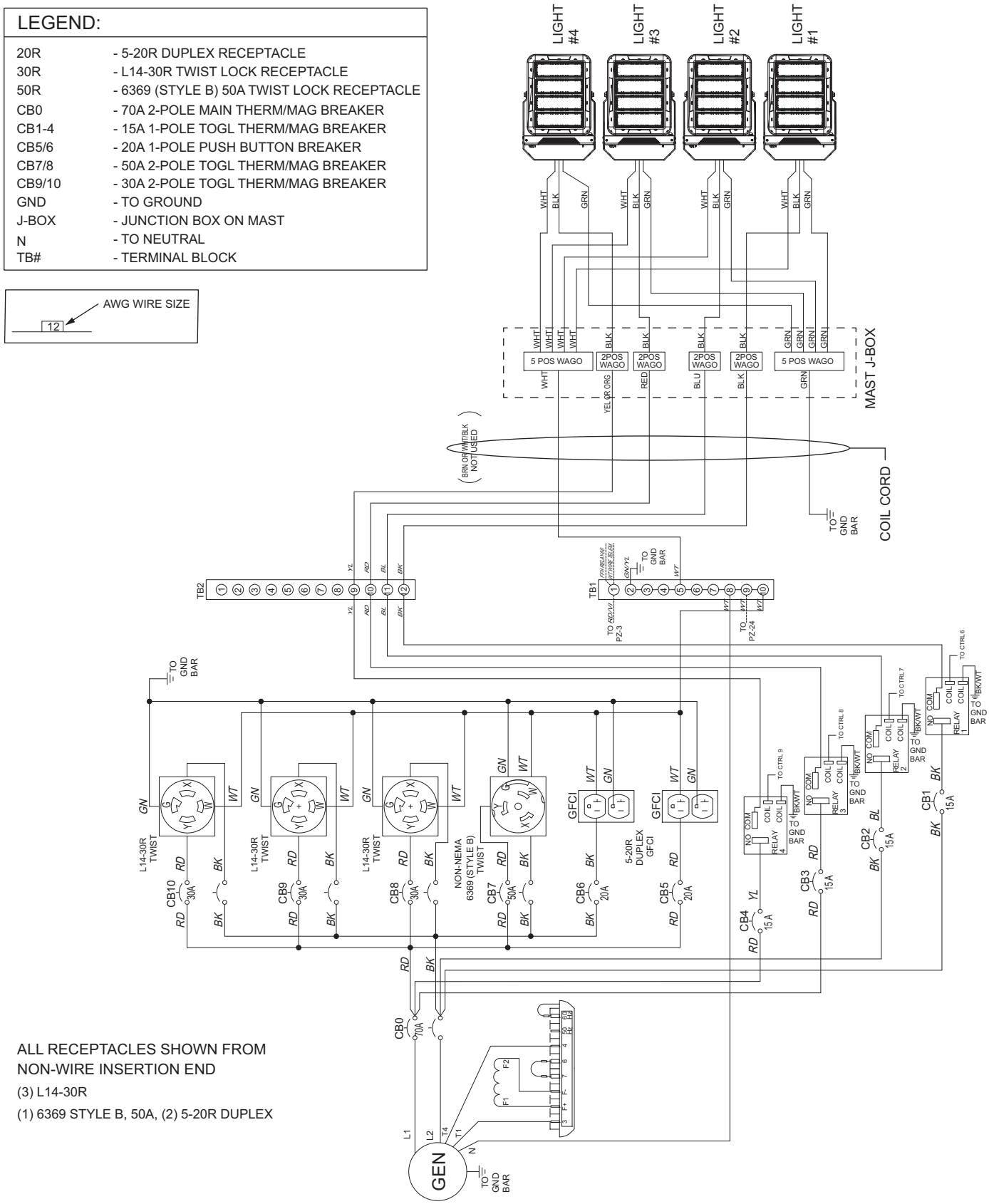

## Receptacle Configuration: Four L14-30R and Two 5-20R Duplex

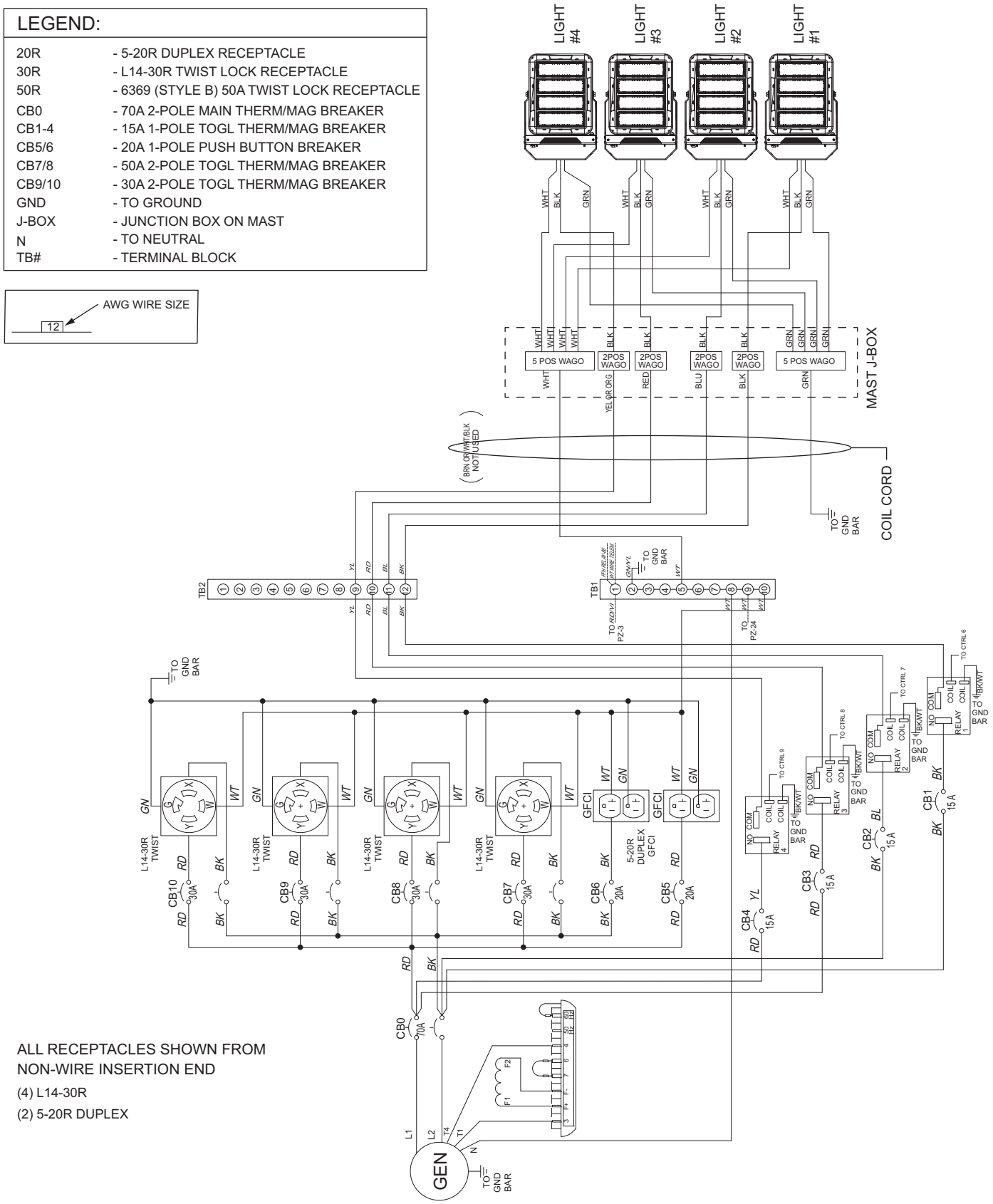


A0001382434SH11_A_02.03.21

## Receptacle Configuration: Two TT-30R, Two 14-50R, and Two 5-20R Duplex

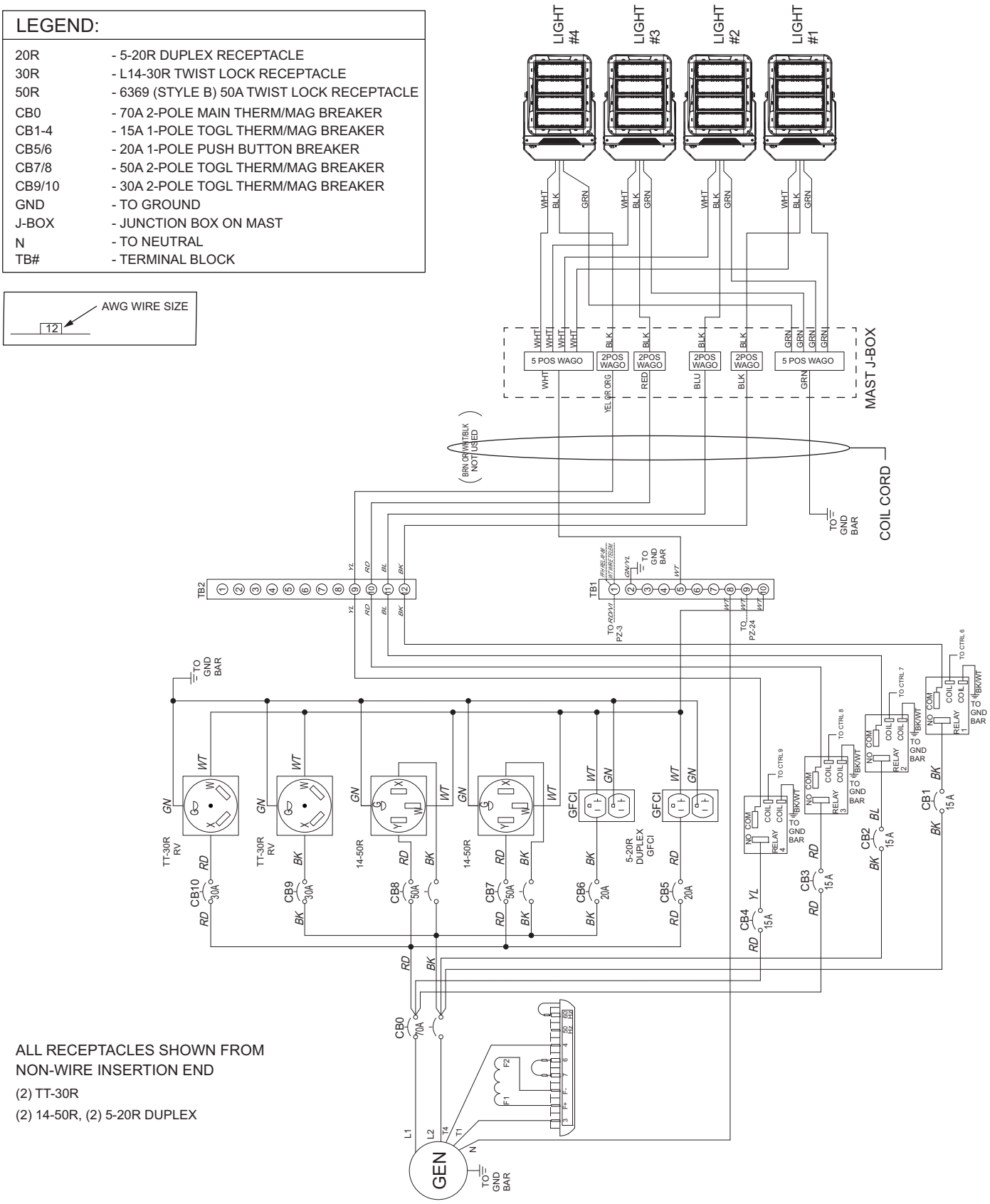

# AC Wiring

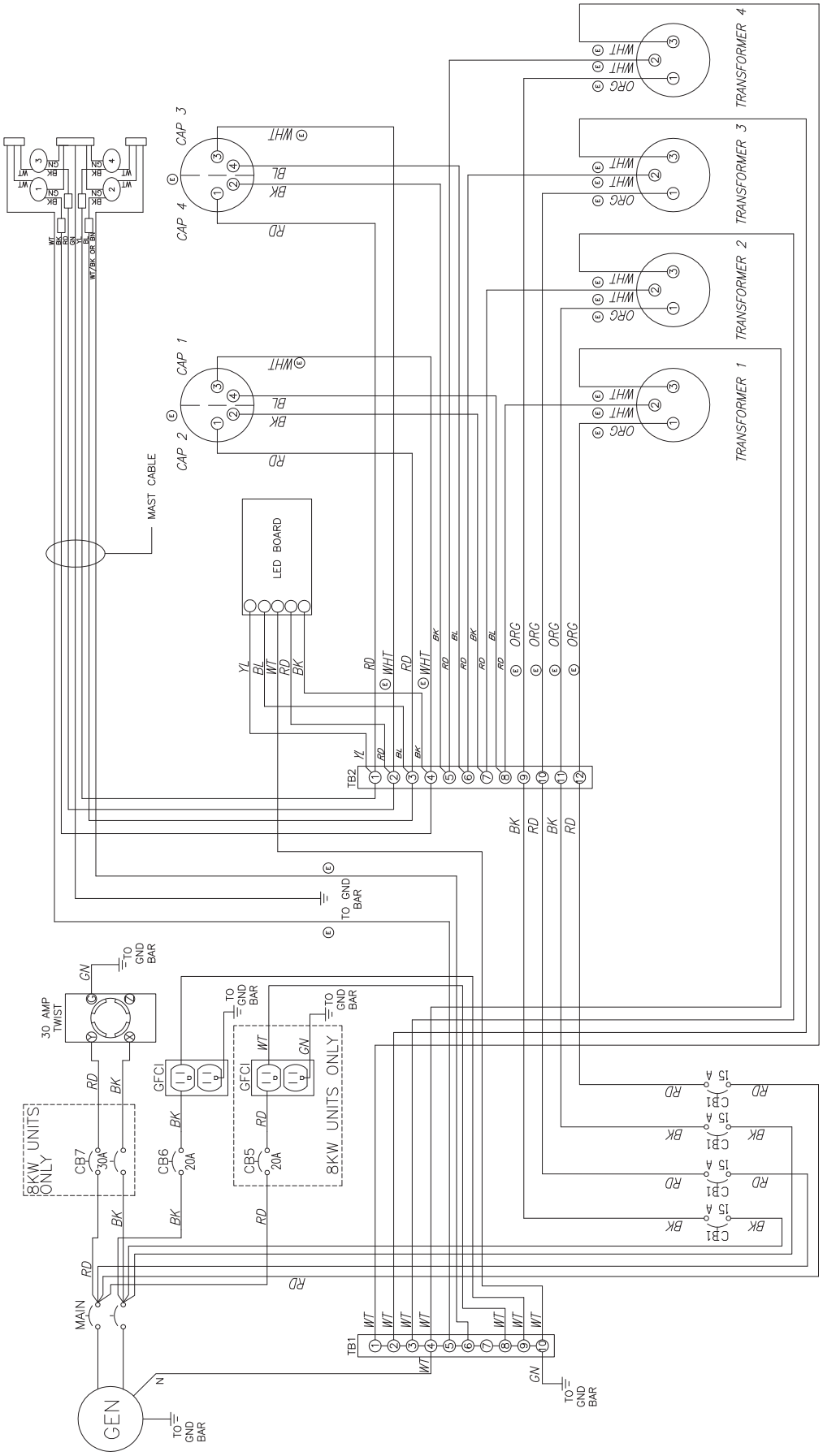
TRANSFORMER 1
TRANSFORMER 2
TRANSFORMER 3
TRANSFORMER 4
CAP 1
CAP 2
CAP 3
CAP 4
MAST CABLE
LED BOARD
TB2
TB1
TO GND BAR
30 AMP TWIST
GFCI
8KW UNITS ONLY
CB7 30A
CB6 20A
CB5 20A
CB1 15 A
MAIN
GEN
90347_E_02.21.19

# DC Wiring—Mitsubishi

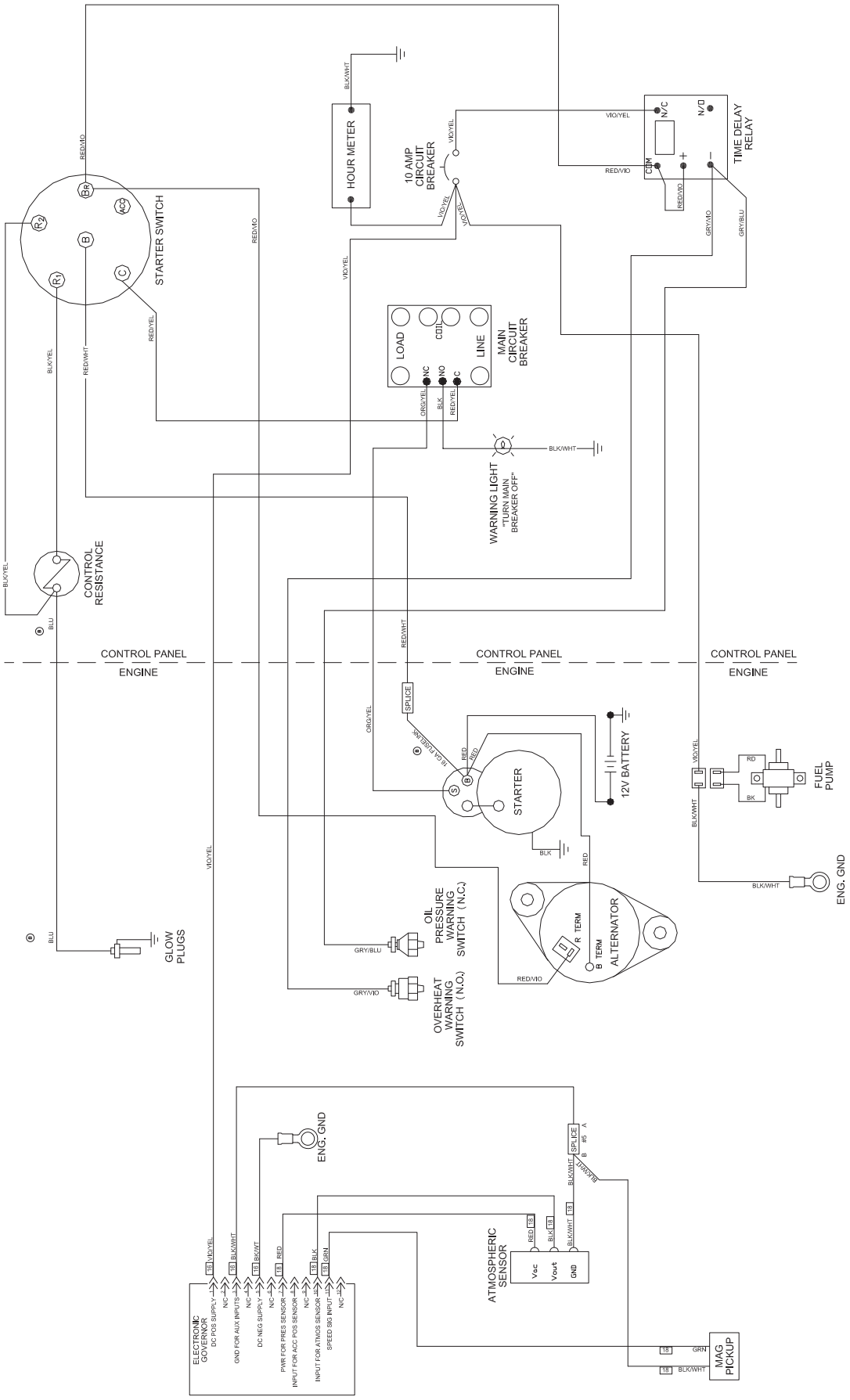


10000044660_B_02.07.19

# DC Wiring—Kubota

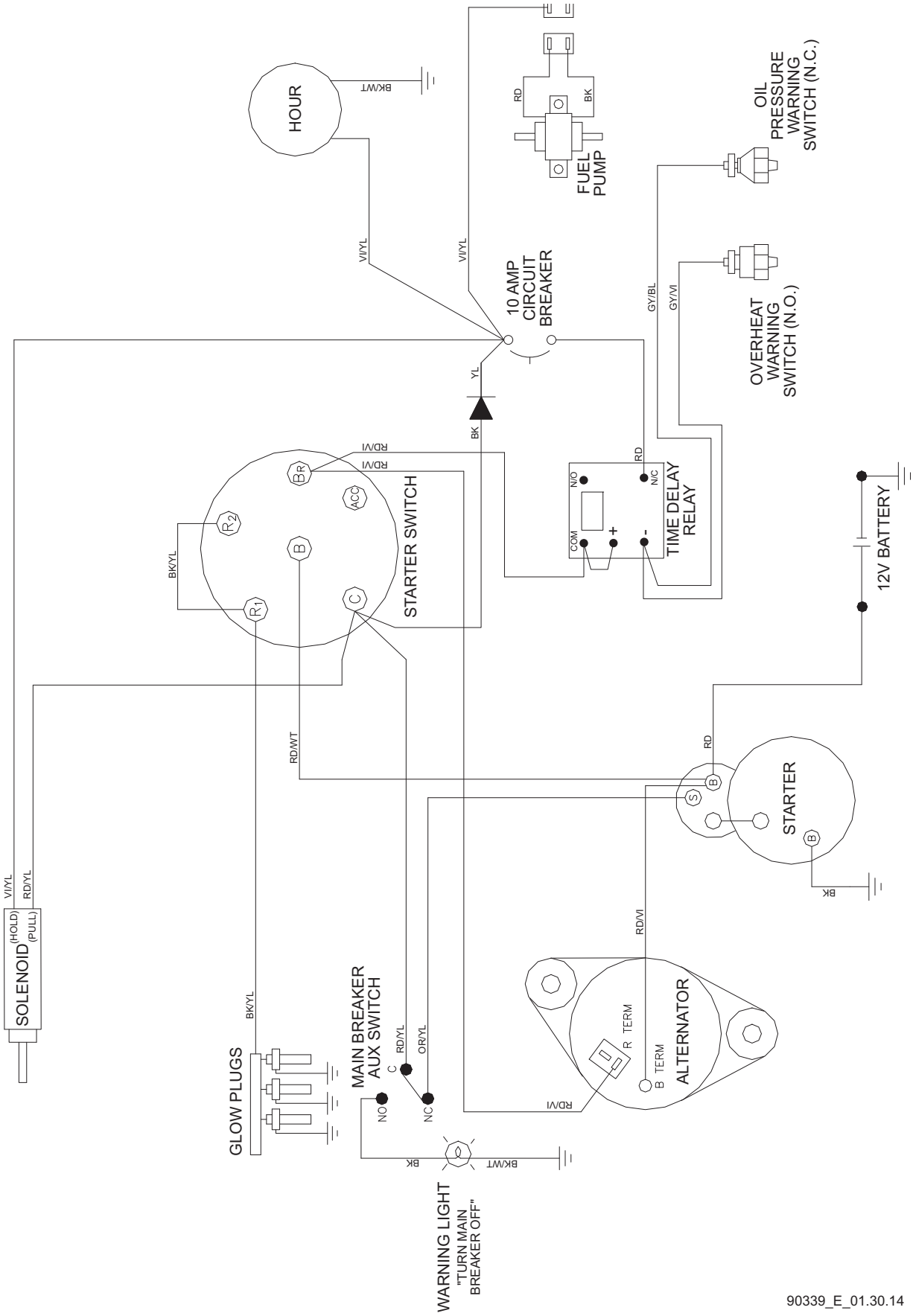

# DC Wiring—Electric Winch

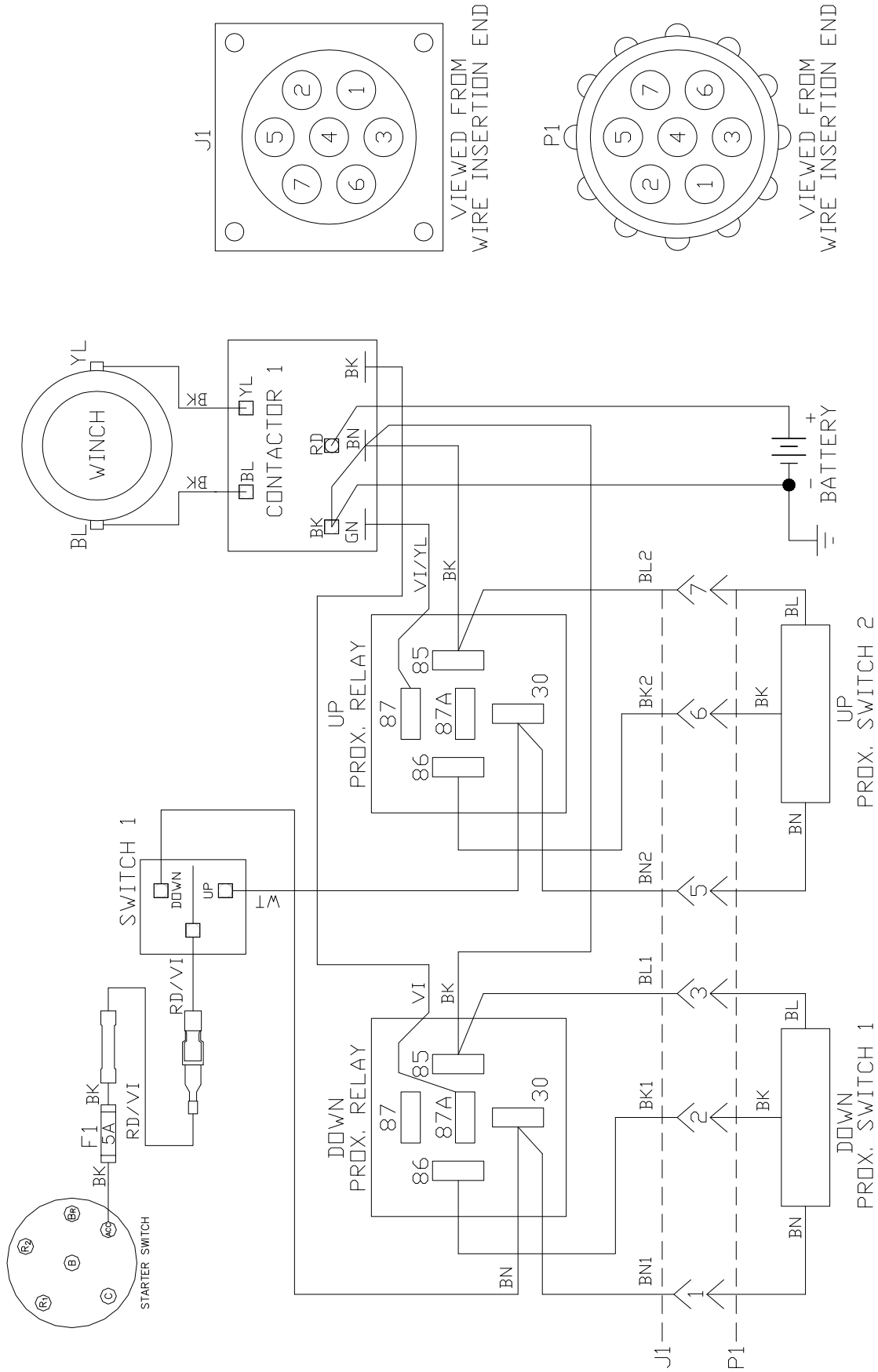

# DC Wiring for Optional Equipment

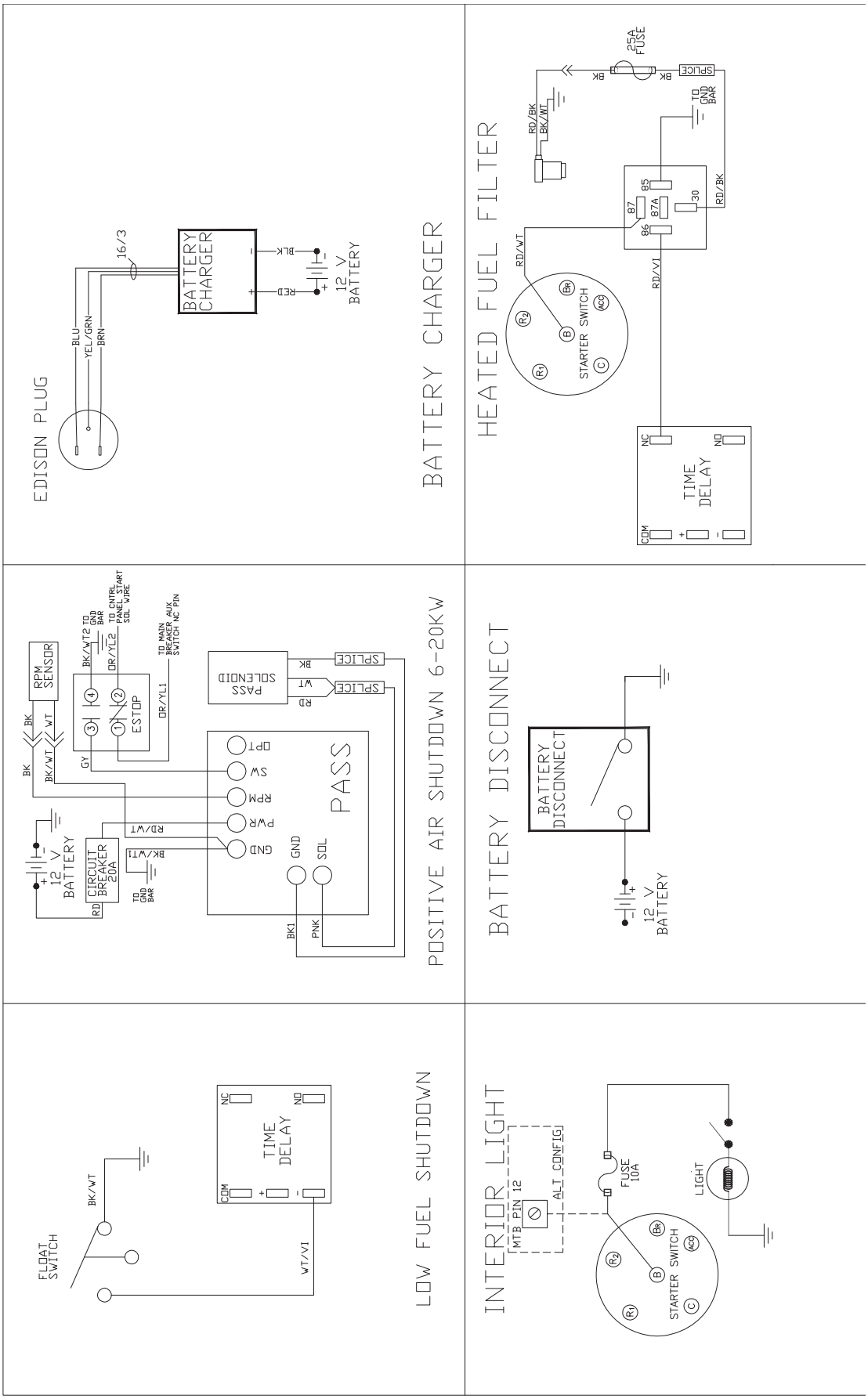

# Trailer Lights

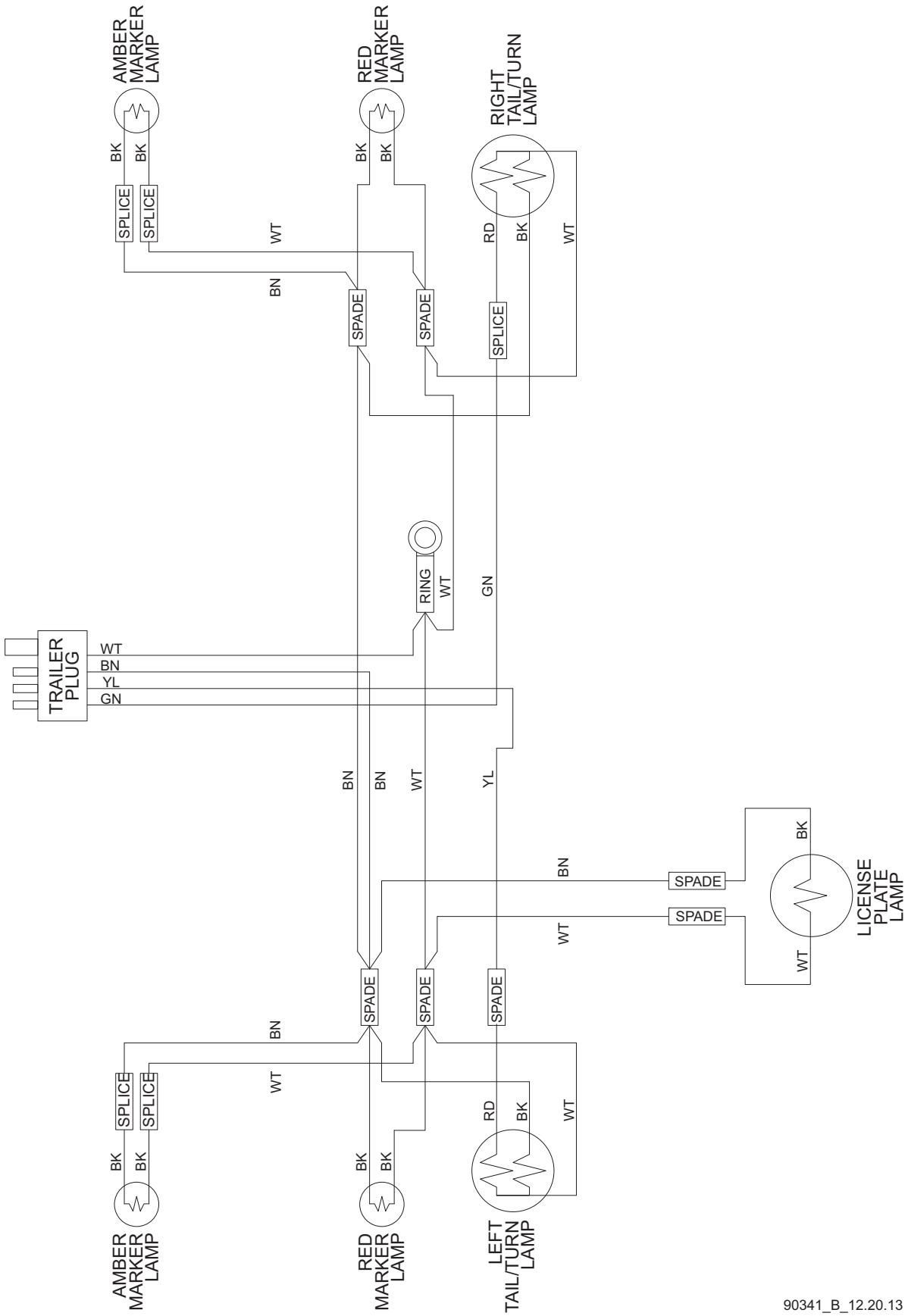

**This page intentionally left blank.**

**This page intentionally left blank.**

Part No. A0001293352 Rev. A 05/12/2021

©2021 Generac Mobile Products, LLC
All rights reserved.
Specifications are subject to change without notice.
No reproduction allowed in any form without prior written consent from Generac Mobile Products, LLC.

Generac Mobile Products, LLC
215 Power Drive, Berlin, WI 54923
GeneracMobileProducts.com | 800-926-9768 | 920-361-4442